BIRLA CENTRAL LIBRARY
PILANI (RAJASTHAN)
Call No 621.43
R426H4
Accession No 46961

CENTRAL LIBRARY
B. I. T. S.
PILANI

Acc. No......

1. **Books are issued for *14 days*.**
2. **Books lost, defaced or injured in any way shall have to be *replaced* by the borrowers.**

Help to keep the book fresh and clean

Acc. No 46961

ISSUE LABEL

Not later than the latest date stamped below.

THE HIGH-SPEED INTERNAL-COMBUSTION ENGINE

BLACKIE & SON LIMITED
16/18 William IV Street, Charing Cross, LONDON, W.C.2
17 Stanhope Street, GLASGOW

BLACKIE & SON (INDIA) LIMITED
103/5 Fort Street, BOMBAY

BLACKIE & SON (CANADA) LIMITED
TORONTO

THE HIGH-SPEED INTERNAL-COMBUSTION ENGINE

BY

SIR HARRY R. RICARDO, LL.D., F.R.S.

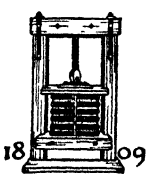

BLACKIE & SON LIMITED
LONDON AND GLASGOW

First issued 1923
Second edition 1931
Third edition 1941
Fourth edition, rewritten and reset, 1953
Reprinted 1953, 1954

Printed in Great Britain by Blackie & Son, Ltd, Glasgow

PREFACE

In 1923 Messrs. Blackie published a book of mine on "The High-speed Internal-combustion Engine". That book has undergone several revisions, the last of which was undertaken by one of my assistants, the late Mr. H. S. Glyde, whose untimely death in 1947 was a sad blow to me.

I feel that to attempt yet another revision of a book, now twenty-seven years old, would hardly be satisfactory, and that it is both easier for me, and I hope more satisfying for my readers, to make an entirely fresh start.

Of the criticisms of the book, in both its original and revised forms, the chief were levelled, not so much at the subject-matter itself, but rather at the many omissions, and I am afraid that such criticism will be even more justified in the case of the present book.

To-day the subject has grown so vast that not a dozen volumes could cover it in all its aspects, nor, I think, does any single individual exist who is competent to undertake so large a task. I frankly am not going even to attempt it, nor am I making any attempt to discuss that intriguing new development, the gas-turbine, for so much has already been published on this subject.

Since my first book was published I have given many lectures at various Institutions and to students. In these I have found almost invariably that my audiences prefer me to talk of my own experiences, and to air my own views, rather than to go into factual detail.

In this present volume I am, therefore, adopting this course, and am making no attempt either to cover a very wide range of the subject, or to describe the products or the work of others. I am concentrating rather on the research, design and development work which has been carried out in my firm's laboratory during the last thirty-five years, and the experience and lessons I draw from it. In so doing I am, of course, choosing the easiest course for myself; I have the advantage also that I can deal with mistakes or failures without the risk of hurting any feelings or doing anyone an injury. I have the further advantage that almost all the test results I quote have been carried out in my firm's laboratory and under my own observation, so that I am aware of all the circumstances and conditions under which they were obtained, and can be reasonably sure, when making comparisons, that I really am comparing like with like. Rather than attempt to cover a wide

field I have tried, on the other hand, to concentrate on those aspects of the subject which, so far as I am aware, have not been given much prominence in the current literature, and to attempt to bridge the gap between the scientist on the one hand and the practical engineer on the other.

The scientist is well versed in the natural laws and can tell us how to keep within them, but he is apt to be a little hazy and uncertain as to the capacity of the ironmongery at his disposal. The practical engineer knows full well both the possibilities and the limitations of his ironmongery, but is not so sure of the natural laws, and is sometimes inclined to be overawed by them.

I have spent most of my life acting as a middleman between these two extremes, and the main objective of this book is to indicate the possible compromises.

In my first book I devoted a good deal of space to discussion of the subject of detonation and its relation both to the fuel and to the design of the combustion chamber. At that time comparatively little had been published on this subject, and I felt that there was a great deal to be done both by the engine designer and by the chemist. Since that date a vast amount of research has been devoted to this problem, and the literature on the subject has become almost bewilderingly extensive, but, while from the point of view of the chemist it grows the more complicated and perplexing the deeper he delves into it, from that of the engineer the issue is now fairly straightforward and well understood. Since this book has been prepared for the engineer rather than for the petroleum technologist, I have devoted only a little space to this subject. Again, in my first book I devoted a good deal of space to the discussion of poppet valves and their mechanism, but touched only lightly on the sleeve valve; in this, in view of its extensive use in aero-engines, I have concentrated rather on the sleeve valve.

I have also laid particular stress on the subject of mechanical efficiency, which, I feel, has been sadly neglected. It is indeed a sobering thought that, despite thirty years of intensive research and development, despite the use of much better fuels, much higher ratios of compression, much improved carburation and so on, the fuel consumption of the pleasure car of to-day, expressed in ton-miles per gallon, is little, if any, better than it was thirty years ago, due largely to the increasing part played by the mechanical losses within the engine itself.

Again, in the chapter on piston aero-engines, I have confined myself to a discussion on trends and tendencies rather than on descriptions or details of actual engines, for these have already been so fully and so ably dealt with in many excellent works on the subject.

The present book may be divided roughly into three sections. The first few chapters deal with general principles; in these I have sought

to indicate trends and tendencies rather than go into much detail, for this may be found in the many excellent books and papers by those who have made a special study of each particular aspect. The next few chapters deal with the ironmongery, and in these I have gone into rather more detail, for it is upon detail that the success or failure of the hardware depends. The final chapters deal with certain lines of research and development which have been carried out in my firm's laboratory, and if I have devoted perhaps rather too much space to these and at times gone back over rather ancient history, my excuse is that I have done so in the hope that the story may suggest some hints or lines of thought to others who are undertaking, or about to undertake, similar lines of work.

I feel that some apology is needed for the lack of reference to the work of others; this is not entirely due to egotism, for of course I, like everyone else, have been influenced profoundly and inspired by the work of others; but their number is legion. To refer to only a few would be invidious; to refer to all, impossible.

Finally, my thanks are due to the members of the staff of my firm's laboratory who have helped me by collecting data and by the offer of many useful suggestions. In particular I would like to mention Mr. C. N. Goldsmith, who has prepared many of the drawings, Mr. D. Downs for his help and suggestions, Mr. L. R. C. Lilly, Mr. V. H. Robinson, Mr. P. Mead, and Mr. Martin Howarth, all of whom have helped me in various ways, and last, but not least, Mr. E. J. F. Sumner, for his indefatigable work in typing from my very indecipherable handwriting.

H. R. R.

SHOREHAM-ON-SEA
1952

CONTENTS

THE HIGH-SPEED INTERNAL-COMBUSTION ENGINE

Introduction

When we review the progress of mechanical engineering in the past we find that each new line of development starts with a period of experiment and groping, during which a wide range of types is evolved. By a process of elimination this range is very soon whittled down to one or two survivors; in the final choice of these survivors, chance plays often quite as important a part as merit. We are too fond of crediting a few particular individuals with a monopoly of inventive genius. Ripe seeds of invention everywhere abound, and it awaits only a certain combination of need, of circumstance and, above all, perhaps, of chance, to decide which shall germinate.

On the one or more survivors, not necessarily the best, the attention of the whole engineering world is then concentrated, with the result that step by step they are improved out of all recognition and reign supreme, until they reach almost the very limit of their capacity, when new and fundamentally better types eventually replace them. Such has been the history of the steam engine which, a century ago, had crystallized into an almost standard design of open-type, double-acting, slow-running engine: for many years this held undisputed sway, until it was displaced by the enclosed high-speed vertical type; this again was perfected until it seemed almost final, only to be superseded in turn by the turbine. That this process is so prolonged and that the obsolete so long outlives its day, is due to the fact that, in every age, the newcomer in its raw and undeveloped state is invariably pitted against the champion of the older school, and challenged to defeat it in the first round. Allowance is seldom made for the fact that the reigning type has enjoyed the benefit of generations of experience under every conceivable condition, supplemented by the combined skill of the best talent in the country, while the newcomer, of course, lacks these advantages. Particularly does this apply to the question of reliability, for reliability

is attained only by prolonged experience both in manufacture and in service.

To-day it would seem that the time is nearly ripe for the appearance of a new and fundamentally better form of internal-combustion engine. In the short space of ten years, the gas-turbine has not only sprouted but has grown with such rapidity that it has almost completely crowded out all forms of piston engine for high-powered aircraft while, looming on the distant horizon, is the vision of atomic energy, utilized probably through the medium of the gas-turbine.

Though the gas-turbine has already conquered the air, it seems probable that its progress in other fields will be less spectacular, for the air is clearly its spiritual home, where every advantage resides in its favour, and where its rival, the piston engine, less happy in a rarefied atmosphere, is already nearly at the end of its tether.

Though some very promising exploratory tests have already been made, none the less it will probably be many years yet before the gas-turbine can hope to compete in the wide field of road transport, for in this field, with its prevailing low load factor and insistence on fuel economy, most of the advantage would appear still to lie with the piston engine.

It is always dangerous to prophesy, but it would appear probable that, for the next ten years at least, the light high-speed internal-combustion engine will reign supreme in all forms of road transport, in the smaller classes of shipping and, in short, in those applications where a small, light, compact, and highly efficient mobile power plant is required.

Apart from the gas-turbine the most important development in the internal-combustion engine field, during the last thirty years, is probably the initiation and successful commercial development of the light high-speed Diesel engine. In the same period, the petrol engine has, to all outward appearances, undergone but little change, but in this comparatively short space of time the average power output obtainable from a given size of engine has been considerably more than doubled, and in the case of aero-engines more than quadrupled. This large increase in performance has been obtained without any radical changes in design. At least 70 per cent is due to our greatly increased, though still very imperfect, knowledge of the process of combustion. This is reflected in improvements in the form and cooling of the combustion chamber, to give better control, and still more in the composition of the fuel, for it is only during the last thirty-five years that the importance of the blending and treatment of the fuel has begun to be recognized.

Until the first world war, any petroleum distillate boiling below a certain temperature, and having a specific gravity below a certain purely arbitrary figure, was sold as petrol, and that quite regardless of

the molecular structure of its component parts. To-day, all this has changed completely; now it is known that hydrocarbon molecules of a certain structure will break down easily, and give rise to detonation, which sets a hard and fast limit to the performance obtainable; it is known, too, that by certain processes in the production of petrol, the structure of these molecules can be changed in order to increase their stability, and their tendency to detonate can be further reduced by adding dopes, such as tetraethyl lead.

Nearly fifty years ago, the late Professor Bertram Hopkinson called attention to the phenomenon of detonation in the petrol engine, which he attributed to the setting-up of a pressure wave, and suggested that it was probably a characteristic of the fuel; but his was then a voice crying in the wilderness, and his warnings had passed unheeded by all but a few of his disciples; it was not until the first world war that its importance began seriously to obtrude itself. Then followed gradually the realization that it was detonation, and detonation alone, which set a limit, and a relatively early limit, to the power output and economy of the petrol engine; the incidence of detonation, in fact, determines both the weight of air which can be consumed, and the efficiency with which the heat thus liberated can be converted into power.

In the field of high-speed piston engines the rapid development of the Diesel or compression-ignition engine during the years between the two world wars has been the most outstanding feature. Within a few years it has succeeded in ousting the petrol engine from almost all forms of heavy road transport and indeed from all industrial usage excepting only for very small powers, where the lower initial cost of the petrol engine still permits its survival. With the almost complete surrender of the air to the gas-turbine, it would seem that the role of the petrol or spark-ignition engine has become restricted to that of the pleasure car, the lighter forms of commercial vehicle and low-powered aircraft, a limited but none the less a vast field. Except for certain military purposes, where petrol is preferred because of its greater availability, it is doubtful whether any petrol engines of powers greater than that required for large pleasure cars are being developed in this country to-day. Similarly, at sea, the compression-ignition engine has virtually ousted both the petrol and the paraffin engine from all but very small craft.

No wholly satisfactory definition has been found to distinguish what we term, somewhat loosely, a Diesel engine from that which we term, equally loosely, a petrol engine. According to the textbook, the former works on the constant pressure and the latter on the constant volume heat cycle; in point of fact both operate on a heat cycle which is a compromise between the two, and the most we can say is that, of the two, the petrol engine adheres a little more closely to the constant

volume cycle. The really essential difference between the two is that the petrol engine inhales an externally prepared combustible mixture which is ignited at the appropriate moment by the passage of a timed spark, while in the so-called Diesel engine no fuel is present in the cylinder until the time is ripe for ignition, when it is injected and ignited by the heat of compression. The former requires that the degree of compression shall be low enough to prevent auto-ignition or detonation; the latter that it shall be high enough to ensure auto-ignition and that with the least possible delay.

We cannot define the two types of engine by the fuels they use for, while the spark-ignition engine is restricted to the use of gases or volatile liquid fuels such as petrol, alcohol, or even kerosene, the other can perform equally happily on volatile or non-volatile fuels. In the author's belief the best definition appears to be that based on the type of ignition they employ, e.g. spark ignition or compression ignition, and this is the distinction which he has adopted throughout, though even this is not wholly satisfactory. For example, the earlier types of gas, petrol, and kerosene engines, before the days of electric ignition, depended for ignition on compression into a hot tube or bulb and, as such, could rightly claim to be called compression-ignition engines. Since, however, the use of electric ignition has now become universal for all such engines, this anomaly no longer applies. None the less some anomalies are still to be met with, for example, the spark-ignition Hesselmann engine. This is frequently described as a Diesel engine, because it is capable of using the more volatile Diesel fuels, though it is, in fact, a normal low-compression spark-ignition engine, except in so far that the fuel is injected not during the suction stroke along with the air, but during compression and only a little in advance of the timed spark.

Again there has lately sprung into prominence the miniature so-called Diesel engine for model aircraft. This is indeed a hybrid, for it inhales a pre-mixed and externally carburetted charge of vaporized fuel and air and, at the same time, relies upon compression ignition. Such a combination is rendered possible by the peculiar characteristics of ether, which forms at least the bulk of the fuel it uses. Despite these somewhat freak examples and possibly a few others, the definition " spark ignition " or " compression ignition " would seem to provide the best and most generally applicable dividing line between the two generic types of engine.

This book is devoted to some of the problems of the high-speed engine. Some definition is perhaps needed as to the term " high speed ". High speed and low speed are, of course, relative terms and there is no obvious dividing line that can be expressed in any absolute figures.

Clearly a high-speed engine can be run slowly, and why should not a low-speed engine be made to run fast?

The dividing line is to be found, not in any terms of revolution or piston speed but in a totally different conception of design, and in a totally different technique of manufacture. In the low-speed engine the dynamic forces set up by the inertia of the pistons and other moving parts are relatively small, hence these parts can be made very robust without imposing any undue stresses on the structure or the bearings, but dynamic forces increase as the square of the revolution speed and in a high-speed engine become the dominating factor. The essence then of high-speed engine design is the use of as rigid and compact a structure as possible containing the lightest possible moving parts, while stiffness, rather than strength, becomes the dominating factor; though like all general statements, this requires some qualification for, in any engine, there are certain elements where local concentrations of stress or excessive loading demand the introduction of some flexibility.

The necessity to employ light moving parts with very small heat capacity or heat paths calls for special provision for dealing with the flow and transfer of heat which, in the low-speed type of engine, can largely be met by the simple process of employing greater thicknesses of metal.

Again, on the question of manufacturing technique the essential feature of the high-speed engine is that all the working or wearing parts shall be of such small dimensions that they can be handled readily on automatic or special-purpose machines, can easily be heat-treated, or can be made of materials not available in large bulk.

CHAPTER I

Combustion

SPARK-IGNITION ENGINES

The process of combustion in the cylinder of a spark-ignition engine appears to be substantially as follows. A single intensely high temperature spark passes across the electrodes, leaving behind it a thin thread of flame. From this thin thread, combustion spreads to the envelope of mixture immediately surrounding it at a rate which depends primarily upon the temperature of the flame front itself and, to a secondary degree, upon both the temperature and the density of the surrounding envelope.

In this manner there grows up, gradually at first, a small hollow nucleus of flame, much in the manner of a soap bubble. If the contents of the cylinder were at rest, as in the case of an explosion vessel, this flame bubble would expand with steadily increasing speed until it extended throughout the whole mass. We can picture, then, a thin filament or envelope of flame enclosing the highly heated products of combustion, while ahead of it lies the still unburnt combustible mixture. If the contents of the cylinder were at rest, this filament would expand as a smooth unbroken front.

In the actual engine cylinder, however, the mixture is not at rest. It is, in fact, in a highly turbulent condition, that is to say, it consists of a mass of whirls and eddies with no general direction of movement, with the result that the filament of flame is broken up into a ragged front, thus presenting a far greater area of surface from which heat is being radiated; hence its advance is speeded up enormously. Stroboscopic observations through transparent windows in the cylinder head and others with ionization indicators in the combustion space all indicate that while the rate at which the flame front travels is dependent primarily on the degree of turbulence, its general direction of movement, that of radiating outward from the ignition point, is but little affected, unless there is superimposed upon the general turbulence some form of directional flow or air-swirl.

As a mental picture the author prefers to regard the process as though it developed in two quite distinct stages, one the growth and development of a self-propagating nucleus of flame, and the other the spread of that flame throughout the combustion chamber. The former

is a chemical process depending upon the nature of the fuel, upon both temperature and pressure, and also upon the temperature coefficient of the fuel, that is, the relationship between temperature and rate of acceleration of oxidation or burning. The second stage is a mechanical one pure and simple. It is not suggested that these two stages are entirely distinct, for there is no hard and fast dividing line and they must, of course, interact upon one another to some extent; for example, the higher the flame temperature and the more rapid the rate of burning during the first stage, the more rapidly will combustion spread with a

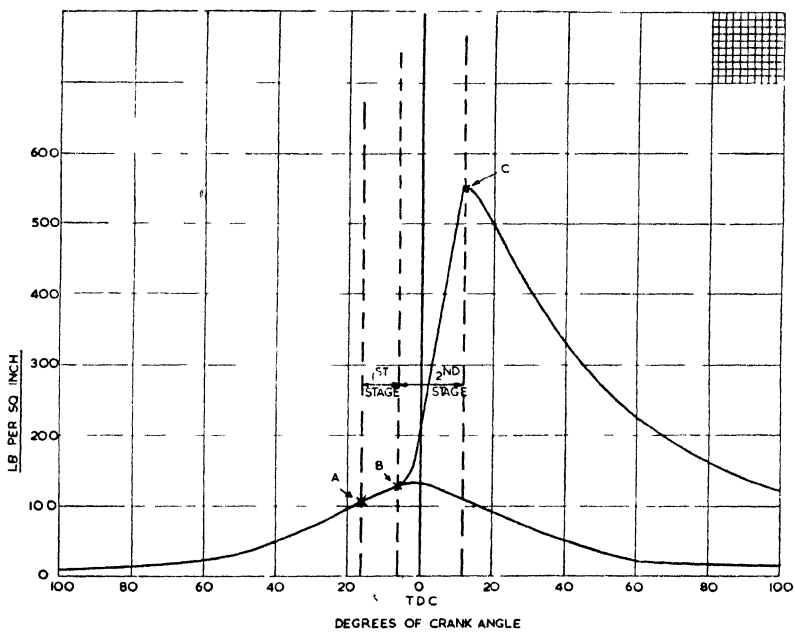

Fig 1.1 —Indicator diagram showing two stages of combustion in a spark ignition engine

given intensity of turbulence. We can, however, define the starting point of the second stage as that at which the first measurable rise of pressure can be seen on the indicator diagram, fig. 1.1, where A shows the point of passage of the spark, B the point at which the first rise of pressure can be detected, and C the attainment of peak pressure. Thus A–B represents the first stage and B–C the second. Although the point C marks the completion of the flame travel, it does not follow that at this point the whole of the heat of the fuel has been liberated, for even after the passage of the flame, some further chemical adjustments due to reassociation, etc., and referred to generally as after-burning, will continue to a greater or less degree throughout the expansion stroke.

Range of Burning

The curve (fig. 1.2) shows the kind of relationship between flame temperature and rate of burning for a homogeneous mixture of any hydrocarbon vapour in air. The figures on the vertical scale are intended to represent the time from the passage of the spark to the formation of a self-propagating nucleus of flame, that is to say, they represent the time occupied by the first stage of the combustion process. Needless to say, they must not be regarded as hard and fast values,

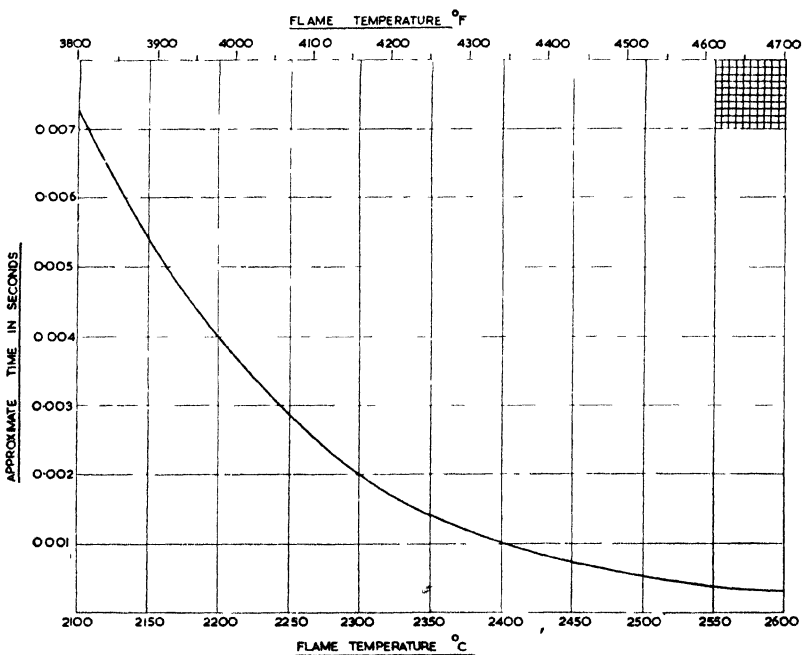

Fig. 1.2.—Approximate relationship between flame temperature and rate of burning

but only as indications of the general relationship. The curve (fig. 1.3) shows the approximate flame temperature at different mixture strengths, assuming a compression ratio of five to one, and after taking into account such considerations as dilution with the residual exhaust products, heat given up to the incoming charge, dissociation, etc. The curve (fig. 1.4) shows the two previous curves expressed in terms of rate of burning against mixture strength during the first stage of the combustion process. In fig. 1.5 the curve of fig. 1.4 has been expressed in terms of degrees of crank angle of an engine running at 2000 r.p.m., and a constant time, namely 12° of crank angle, has been added throughout to represent the second stage of the process, that is the distribution

of flame by turbulence, for all observations appear to agree in showing that the intensity of turbulence, and therefore the rate of spread of the

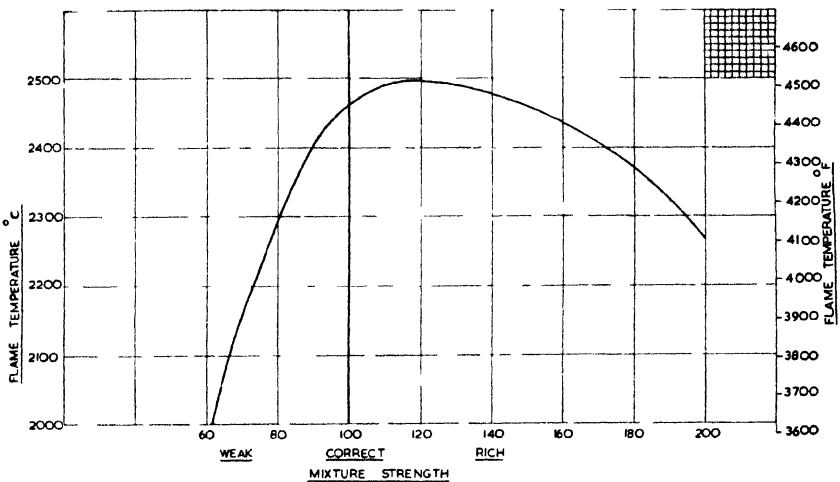

Fig 1 3 —Approximate relationship between flame temperature and mixture strength

flame front, increases directly with engine speed This curve, therefore, expresses the time, and probably about the minimum time, in terms

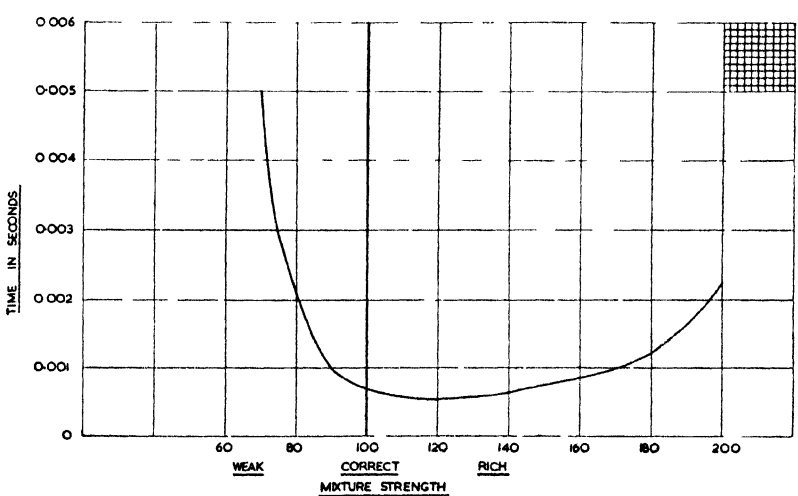

Fig 1 4 —Approximate relationship between mixture strength and rate of burning

of crank angle, from the passage of the spark to the attainment of maximum pressure. This period is, in practice, limited to about 50°, for if the ignition be further advanced it will occur when the gases are

at a much lower pressure and temperature; flame propagation will therefore be correspondingly slower, so that nothing will be gained. As we approach either end of the mixture range the conditions become unstable and there is a tendency for a feeble and unstable flame to linger in some hot, secluded spot (such as the inside of the sparking-plug body) throughout the whole of the expansion and subsequent exhaust stroke, and so set alight the next incoming charge, causing back-firing through the carburettor. This is particularly noticeable at the weaker end of the range where, as seen in the last figure, the trend of the curve is much steeper.

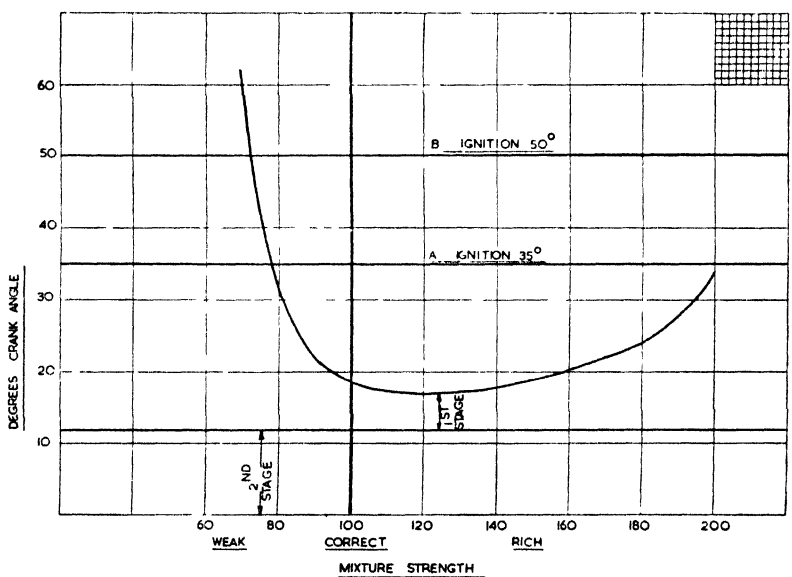

Fig. 1.5.—Approximate relationship between mixture strength and rate of burning, but expressed in terms of crank angle of an engine running at 2000 r.p.m.

It will be seen that the assumed time taken, with a rich mixture, to establish a self-propagating flame is equivalent to somewhere about 8° of the crankshaft for such a fuel as petrol. Suppose now that the engine speed be increased from 2000 to 4000 r.p.m.; the intensity of turbulence will be doubled, hence the rate of distribution of flame will also be doubled, and the 12° of crank angle allowed for this will still hold good. The time taken, however, to develop the flame nucleus will remain substantially the same, hence the 8° will become 16° and the total ignition period will be increased from 20° to 28° of crank angle.

So far as all volatile hydrocarbon fuels are concerned, the temperature coefficient and the range of burning do not vary appreciably, and we are compelled to work with a flame temperature exceeding

about 2200° C. At the other end of the scale, if we exceed about 2500° C., the rate of burning becomes so great, in the case of many fuels, as to induce detonation; hence, in practice, we can work within only a very restricted range of flame temperature, and therefore of mixture strength, at all events on the weak side. In the case of hydrogen, the rate of burning is something like twelve times as great as that of petrol. If now we alter the above curve by increasing the speed of the first

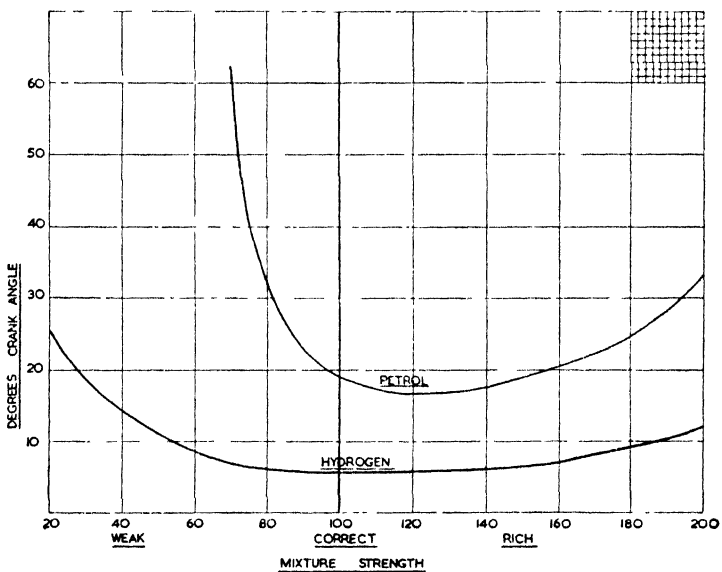

Fig. 1.6.—Approximate relationship between mixture strength and rate of burning, but comparing petrol and hydrogen

stage twelve times we arrive at the result shown in fig. 1.6, from which it will be seen that with the same limiting ignition advance we can reduce the mixture strength to well below 20 per cent of that required for complete combustion, in fact right down to no load without throttling the mixture supply.

Experiments have shown that if we increase the flame temperature by the addition of oxygen:

(*a*) We can then, of course, burn more fuel and obtain more power.

(*b*) We increase the range of burning and, at the weak end, we can still consume the same minimum amount of fuel per cycle, i.e. we can go down to the same minimum flame temperature and that with the same ignition advance.

(*c*) With a rich mixture and therefore high flame temperatures, we require substantially less ignition advance.

(*d*) The tendency to detonate is greatly increased and, in fact, we cannot work at a flame temperature appreciably above the normal without lowering the compression ratio very considerably to compensate.

At the other end of the scale, if we reduce the flame temperature by dilution with inert gases, such as steam, nitrogen, or carbon dioxide:

(1) We reduce the range of mixture strength but can still go down to the same minimum amount of fuel per cycle with the same ignition advance.

(2) We require more ignition advance with rich mixtures.

(3) We reduce the tendency to detonate.

If we raise the compression ratio, we tend to speed up the whole process, less ignition advance is needed, the available range of mixture is widened very slightly, and the tendency to detonate is increased. In this case, two factors enter in, viz. pressure and temperature—the former is raised considerably, the latter but slightly—and it seems probable that it is the increase in pressure rather than in temperature which is having the greater influence.

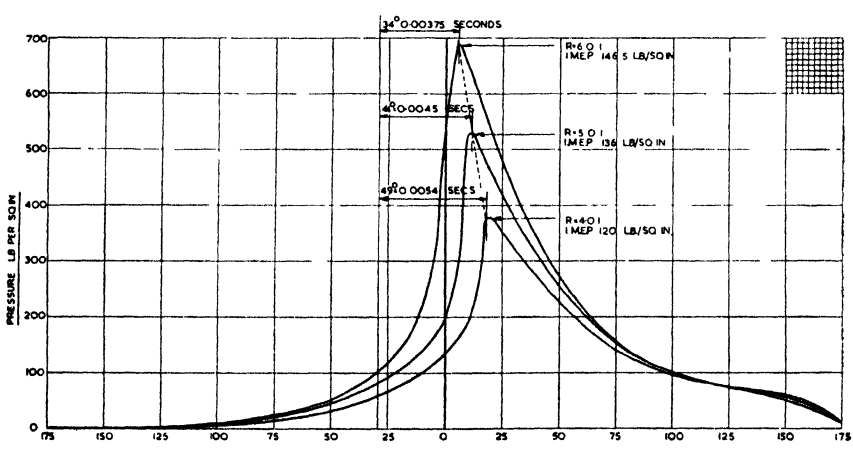

Fig. 1.7.—Actual indicator diagrams taken at three different compression ratios

The increased speed of combustion with increase of compression is very clearly shown by the three indicator diagrams, fig. 1.7, which were taken from the author's variable-compression engine at compression ratios of four, five, and six to one, with the same mixture strength and the same ignition timing in all cases.

For optimum efficiency we should aim at such an intensity of turbulence as will give us a rate of pressure rise of 30–35 lb. per sq. in. per degree of crank angle during the second phase of the combustion

process. If we exceed this rate, then we tend to lose by direct heat loss to the cylinder walls due to intense convection more than we gain by the more rapid burning, see fig. 1.8. To reach this optimum at low compression ratios will require very intense turbulence, but owing to the general speeding-up of both phases of the process at high ratios of compression, only a moderate intensity of turbulence such as is set up by the normal entry through the inlet valve is sufficient to give us the rate of pressure rise we are seeking.

The above considerations would suggest that, with a limited range of ignition timing, the greater the turbulence the wider would be the possible range of mixture, though clearly within narrow limits only.

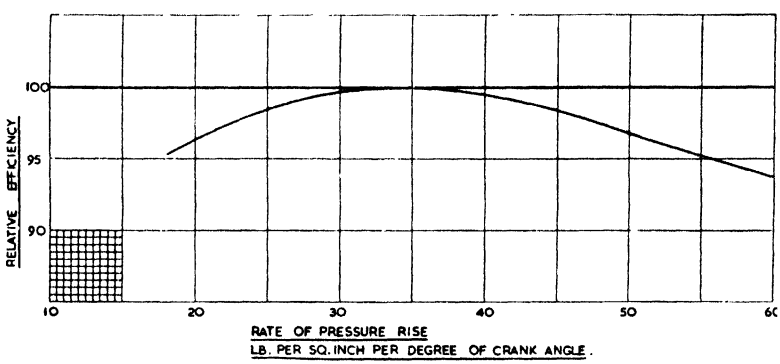

Fig. 1.8.—Effect of rate of pressure rise on efficiency

Actual experience tends to confirm this up to a point, but some experiments which the author carried out on a special research engine showed that under conditions of extreme turbulence (far and away beyond the range existing in any normal type of engine) the mixture range was actually narrowed, and that to such an extent that the engine would run only with a mixture containing from 5 per cent to 30 per cent excess fuel; any attempt to reach beyond this narrow range resulted in misfiring. In this instance the rate of pressure rise was well over 100 lb. per sq. in. per degree of crankshaft, and the general running of the engine was intolerably rough and noisy. In this case, the turbulence was augmented by artificial means to quite an excessive degree, probably so great as to scour away and prevent the formation of a nucleus of flame at the sparking-plug, except when the mixture was that giving the maximum flame temperature; in other words, the draught within the cylinder was such as to blow out the candle.

Cyclical Variations

In all spark-ignition engines, and more especially when using volatile liquid fuels, it will be found that the indicator diagrams vary

very considerably from cycle to cycle and that this variation increases greatly as the mixture strength approaches either the weak or the rich end of the range. The variations observed take place for the most part in the initial delay period and are due, no doubt, to variations in the composition of that minute part of the mixture forming the initial nucleus of flame. This may be due, in the case of carburetted mixtures, to slight differences in the mixture strength supplied as between one cycle and the next, but it is due also, and probably to a much greater extent, to differences in the proportion of inert residual exhaust gas, which, acting as a diluent, will tend to influence the initial flame temperature, and therefore its rate of build-up, for it will be apparent that a very small variation in the proportion of residual exhaust at the birthplace of the original nucleus will suffice to raise or lower the initial flame temperature and so affect profoundly the duration of the delay period.

Colour is lent to this theory by the observation that the cyclic variations are generally greater at low than at high compression ratios or at reduced loads, that is to say, when the total proportion of residual exhaust is greater. They are greater also when the sparking-plug is either pocketed, or so placed that it is not well scavenged by the carburetted air entering through the inlet valve. Again, the proportion of residual exhaust may vary from cycle to cycle, due to pressure surges in the exhaust manifold. As a general rule, these cyclical variations in the indicator diagram during the combustion period, though they appear to be quite large, have very little adverse effect on the behaviour or efficiency of the engine, for though the peak pressure can be seen to vary both in magnitude and in phase, the mean effective pressure varies very little as between one cycle and the next except when operating near either end of the mixture range, when the variations become such as to cause rough and irregular running and so set a limit to the range of mixture which can be tolerated. When to these cyclical variations in the delay period are added the variations in mean mixture strength as between the several cylinders of a multi-cylinder engine, we find that, in practice, we cannot operate satisfactorily a multi-cylinder engine, with a single carburettor feeding a group of cylinders, at a mixture strength appreciably weaker than 90 per cent of that giving complete combustion, depending to some extent, of course, on such factors as uniformity of distribution of the carburetted mixture, compression ratio, spark-plug position, etc. With gaseous fuels such as methane or propane, thanks in part to the more uniform mixture and in part to the higher ratio of compression we can employ, we can extend the range appreciably and, if hydrogen is present, as in the case of coal gas, we can, of course, extend it very widely indeed.

Stratification

In all the above considerations as to the available range of mixture strength, we have been assuming that the cylinder is supplied with an externally prepared and therefore with a homogeneous mixture. It is clear, however, that if, by the use of fuel injection or by other means, we could contrive to provide a richer mixture in the immediate neighbourhood of the ignition plug, we could then afford to reduce very considerably the mixture strength in the main body of the combustion chamber and so extend the mixture range on the weak side, for it is only the mixture strength of that minute portion of the charge which constitutes the initial nucleus and its immediate surroundings that is really critical. Once a self-propagating flame has been established, it will spread throughout the rest of the chamber even though the mean mixture strength be far weaker than that required for the initial nucleus. In other words, if, by stratification, we can contrive to segregate a small proportion of relatively rich mixture in the region of the sparking-plug, we can weaken the rest much below that which would otherwise be possible. By such means it has been found feasible to operate satisfactorily a two-cycle petrol injection spark-ignition engine with a mean mixture strength of only 60 per cent of that giving complete combustion, and so to obtain a very high thermal efficiency.

Ignition Timing

It is fairly obvious that combustion must be completed as soon as possible, for any heat liberated during expansion can be utilized only at an efficiency corresponding to that of the remainder of the expansion, while, in the limit, heat liberated at the very end of the expansion stroke can do no useful work at all and will serve merely to heat the exhaust valve and exhaust pipe.

On the other hand, we do not want to maintain the maximum combustion temperature any longer than we can help, because of the heat loss to the cylinder walls. It is not desirable therefore to obtain complete combustion, or rather the attainment of maximum pressure, until some 10° to 15° after the top centre. By delaying the attainment of the peak temperature some 10° to 15°, we lose nothing measurable in expansion, but we save an appreciable period of time during which the loss of heat will be very rapid indeed.

Figs. 1.9 and 1.10 show, and Table I records, a series of indicator diagrams taken from a low-compression sleeve-valve engine running at constant speed, with a constant mixture strength, and varying ignition timing. It will be seen that the maximum power and efficiency are obtained when the peak pressure is developed well after the top centre. The optimum ignition timing under these conditions is 17° before top

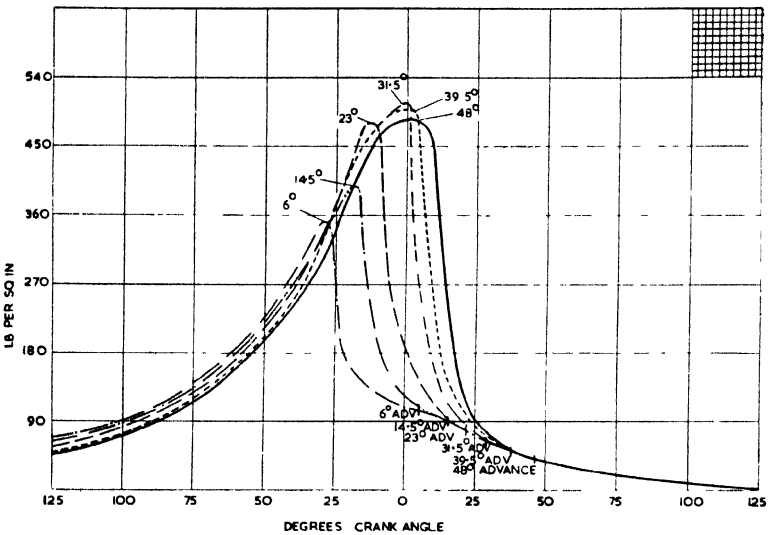

Fig. 1.9.—Group of indicator diagrams with different ignition timing

centre. Fig. 1.10 shows four of the curves of fig. 1.9 plotted in terms of piston displacement.

The results obtained from these tests are given in Table I, in which column (1) gives the time of ignition in degrees before the top dead

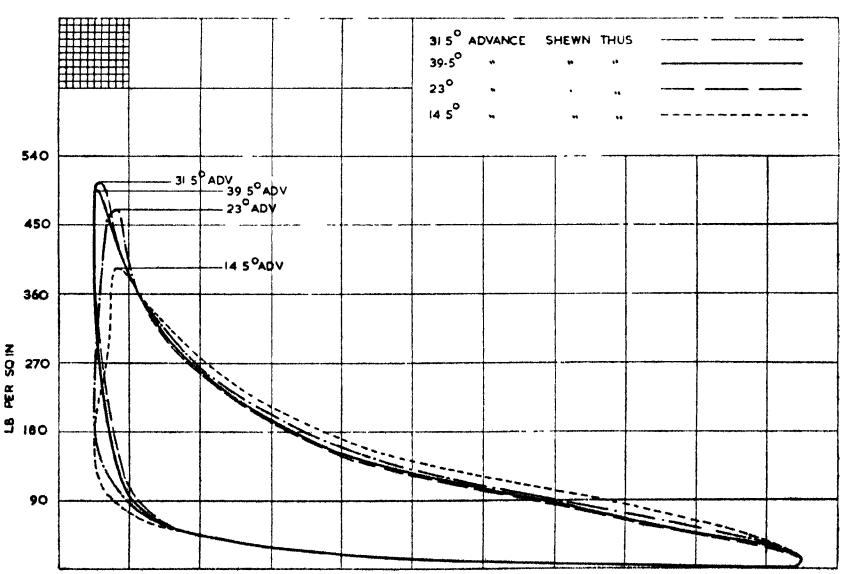

Fig. 1.10.—Group of indicator diagrams with different ignition timing, but plotted in terms of piston displacement

centre, column (2) the indicated mean pressure, column (3) the time which elapsed between the actual passage of the spark and the attainment of maximum pressure, column (4) the outlet temperature of the cooling water, the supply and rate of circulation of which were kept constant throughout; it indicates therefore the relative heat loss. Column (5) indicates the maximum peak pressure.

TABLE I

(1) Ignition timing in degrees before top centre	(2) Indicated mean pressure (lb. per sq. in.)	(3) Degrees of crank angle from passage of spark to attainment of maximum pressure	(4) Temperature of circulating water (°C.) at constant rate of flow	(5) Maximum cylinder pressure (lb. per sq. in.)
6·0	119·0	35·0	53·7	350
10·5	123·5	33·0	54·0	385
14·5	125·0	32·0	54·5	410
19·0	125·0	31·5	55·5	445
23·0	124·0	31·5	56·0	470
27·0	122·5	31·5	56·8	490
31·5	120·5	32·0	57·5	510
35·5	118·7	33·0	58·0	510
39·5	116·8	34·0	58·5	500
44·0	114·0	36·0	59·0	490
48·0	110·5	39·5	59·7	475

The increased heat loss due to the earlier ignition is very clearly shown, while the indicated mean pressure gives a direct measure of the efficiency, since the consumption of both fuel and air was constant throughout the whole series. The above tests were all run at a rather low compression ratio and at a slightly reduced load in order to ensure against the incidence of detonation or pre-ignition even with excessive spark advance, hence the rather long time, viz. 31·5°, occupied by stages 1 and 2.

Surface Combustion

In any internal-combustion engine, there are surfaces such as the exhaust valve head, the sparking-plug electrodes and areas of carbon deposit, whose temperature is considerably above the self-ignition temperature of the fuel-air mixture, and which, if the mixture were stagnant, and sufficient time allowed, would bring about ignition of the whole charge. That, in normal practice, they do not do so is due to the fact that the mixture is not stagnant, nor is there sufficient time allowed for the growth of a self-propagating flame. None the less, a certain amount of surface combustion or pre-oxidation does take place

in the film of mixture in contact with these hot surfaces, and products of partial combustion such as aldehydes are formed during the suction and compression strokes. If, however, the surface temperature exceeds a certain, fortunately a fairly high, limit, then ignition of the whole charge, in advance of the timed spark, will occur. The surface temperature necessary to bring this about depends upon the chemical nature of the fuel and upon its temperature coefficient. It depends also upon a number of other factors such as the intensity of turbulence in the region of the hot surface. Although the head of the exhaust valve or a heavy deposit of carbon probably cause most of the surface combustion by virtue of their relatively large surface area, it is only the electrodes of the sparking-plug, or some projecting stalactite of carbon, which are likely to attain a temperature high enough to produce pre-ignition under normal running conditions.

It is frequently observed that when an engine is switched off after running at a high load, and the throttle almost closed, it will continue to fire, though somewhat spasmodically, and at a very low speed; this is due probably to spontaneous pre-ignition developing from surface combustion over the hot exhaust-valve head or, in the case of a heavily carbonized engine, from some large area of highly heated carbon surface. That, under such conditions, surface combustion can develop into general inflammation is due to the fact, on the one hand, that at very low turning speeds time is available, and, on the other, that with a very small throttle opening there is very little turbulence to remove the stagnant layer in contact with the hot surface. It is generally found that, under these conditions, opening wide the throttle will immediately stop the engine, presumably by introducing sufficient turbulence.

COMPRESSION-IGNITION ENGINES

The process of combustion in the compression-ignition engine differs widely of course from that in a spark-ignition engine. In this case the fuel is injected, in the liquid state, into highly compressed and highly heated air in the combustion chamber. Each minute droplet as it enters the highly heated air is quickly surrounded by an envelope of its own vapour and this, in turn, and after an appreciable interval, is inflamed at the surface of the envelope.

A cross-section of any one droplet would then reveal a central core of liquid, a thin surrounding envelope of vapour, with an outer garment of flame, and this configuration will continue until the whole of the liquid core has been evaporated.

Left to itself, this process would take a long time, but, as in the case of the spark-ignition engine, it can be hustled to an almost un-

limited extent by mechanical movement; in this case by speeding-up the passage of the droplet through the air, or that of the air past the droplet.

The burning of a hydrocarbon fuel in air is an oxidation process pure and simple; it may be intensely rapid or it may be excessively slow. In the latter case we are accustomed to describe it as oxidation rather than burning. If we expose oil fuel to air at ordinary temperatures it will oxidize, but only very slowly; as the temperature of the air is raised the process speeds up. Some of the constituents will oxidize more rapidly than others. Owing to the extreme complexity of these heavy hydrocarbon molecules the process of oxidation is excessively complicated. At ordinary temperatures it may take years to oxidize only a portion of the fuel; at, say, 200° C. it will be a matter of days; at 250° C. of minutes perhaps, and so on, but in all such cases the rate of rise of temperature due to oxidation is less than the rate at which heat is being dissipated by convection and conduction. Ultimately, as we continue to raise the temperature, a critical stage is reached where heat is being generated by oxidation at a greater rate than it is being dissipated. The temperature then proceeds to rise automatically; this—in turn—speeds up the oxidation process and therefore the evolution of heat; events then proceed to move rapidly, and what we describe as *ignition* takes place and a flame is established. The temperature at which this critical change takes place is usually termed the *self-ignition temperature* of the fuel, but it will be apparent that, for any given fuel, this can be no hard and fast figure, for so many factors share in determining it; for example, it will depend very largely upon pressure, for this will govern the intimacy of contact between the fuel and the oxygen needed for its combustion. It will depend too upon the time element. It will be dependent also upon the facility with which the heat released by pre-combustion oxidation can be dissipated; yet again it will depend, of course, upon the chemical stability and upon the temperature coefficient of the fuel. When referring, therefore, to the ignition temperature of a fuel the above factors should be borne in mind.

If, now, instead of heating the air and fuel together we drop cold oil into air already heated well above its ignition point, what will happen? On entering the hot air the extreme outer surface of the droplet will immediately start to evaporate, thus surrounding the core with a thin film of vapour. To accomplish this, however, heat must be withdrawn from the air in immediate contact with the droplet in order to overcome the latent heat of evaporation of the liquid. Thus the immediate effect is to reduce the temperature of a thin layer of air surrounding the droplet and some time must elapse before this temperature can be raised again by abstracting heat from the main bulk of air in its vicinity. So soon as this vapour and the air in actual con-

tact with it have reached a certain temperature, ignition will take place, though the core is still liquid and relatively cold. Once ignition has been started and a flame established, the heat required for further evaporation will be supplied from that released by combustion. We have, then, a core of liquid surrounded by a layer of vapour which is burning as fast as it can find fresh oxygen to keep the process going, and this condition probably continues unchanged until the whole is burnt. Under these conditions, which are substantially those obtaining in a C.I. engine cylinder, we shall have at first a delay period before ignition takes place. The duration of this period will depend clearly upon

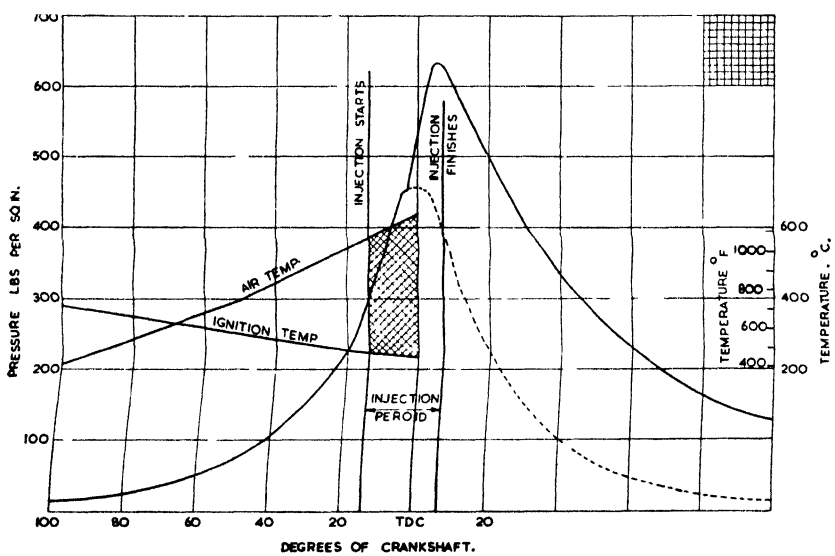

Fig. 1.11.—Variation in air and ignition temperature up to the point of ignition

the excess of air temperature over and above both the boiling-point and the self-ignition temperature of the fuel. The higher the air temperature, or the lower the boiling-point, or the ignition temperature, the shorter will be the delay, but a delay of some sort there must always be. Apart from temperature, pressure also has a very important bearing on the duration of the delay, for the higher the pressure, both the greater the rate of heat transfer and the more intimate the contact between the hot air and the cold fuel. In fig. 1.11 is shown very approximately the variation in air temperature and in the corresponding self-ignition temperature of the fuel during the compression stroke of the engine. The absolute figures are, of course, approximate only, and are given merely as a rough guide. Once the delay period is over and ignition is established, the rate of burning will depend primarily upon the rate at which each flaming droplet can find fresh oxygen to re-

plenish it; that is to say, it will depend upon the rate at which it is moving through the air, or the air is moving past it.

In the compression-ignition engine the fuel is not all fed in at once, but is spread out over a definite period. The first arrivals meet air whose temperature is only a little above their self-ignition temperature and the delay is more or less prolonged. The later arrivals find air already heated to a far higher temperature by the burning of their predecessors and therefore light up much more quickly, almost as they issue from the injector nozzle, and get into their stride practically at once, but their subsequent progress is handicapped, for there is less oxygen to find—the milk has been skimmed by the first arrivals!

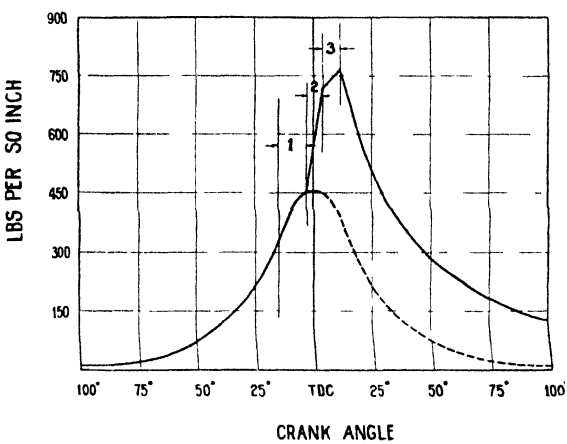

Fig 1.12.—Diagram showing three phases of combustion process in compression-ignition engine

If the air within the cylinder were motionless it is quite clear that only a small proportion of the fuel would find sufficient oxygen, for it is obviously out of the question to distribute the droplets uniformly throughout the combustion space. We depend, therefore, on some considerable motion of the air as well as the fuel, just as we do in the case of the spark-ignition engine but with this important difference that whereas, in the spark-ignition engine, we require a condition of general and indiscriminate turbulence to break up the surface of the flame front and to distribute the shreds of flame throughout an externally prepared combustible mixture, in the compression-ignition engine we require an orderly and controlled air movement such as will both bring a continuous supply of fresh air to each burning droplet and sweep away the products of combustion which otherwise would tend to suffocate it.

We must be careful, therefore, to distinguish between the two conditions which are quite distinct.

When we speak of turbulence, we have in mind a confusion of whirls and eddies with no general direction of flow. When we speak of air-flow, or air-swirl, we have in mind an orderly movement of the whole body of the air with or without some eddying or turbulence.

In the compression-ignition engine combustion may be considered as taking place in three distinct stages—first a delay period, during which some fuel has been admitted but has not yet been ignited. This is succeeded by a period of rapid pressure rise following ignition. The rise is rapid because during the delay period the droplets of fuel have had time to spread themselves out over a wide area and they have

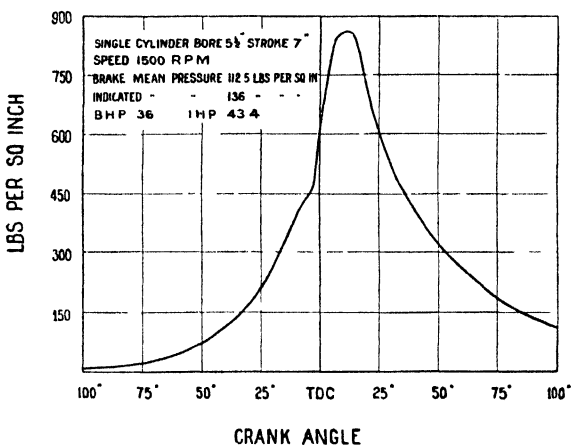

Fig. 1.13.—Actual indicator diagram from high-speed C.I. engine

fresh air all around them. At the end of this second stage the temperature and pressure are so high that the later arrivals burn almost as they enter and any further pressure rise can be controlled by purely mechanical means. Fig. 1.12 is a diagrammatic indicator diagram showing the three stages as quite distinct, while fig. 1.13 shows an actual indicator diagram taken from a high-speed engine in which the three stages, though merged together, are quite distinguishable.

Delay Period

It will be obvious that, for any given injection setting, the pressure reached during the second stage will depend upon the duration of the delay period; the longer the delay the more rapid and the higher the pressure rise, since more fuel will be present in the cylinder before the rate of burning comes under direct control. Some control can, however, be exerted by admitting the fuel slowly at first, or by means of an initial pilot injection, thus ensuring that only a little has entered before ignition starts. In any case we must aim to keep the delay period as

short as possible, both for the sake of smooth running and in order to maintain control over the pressure changes.

Although we want to keep the delay period short, there is, however, a lower limit beyond which we must not go.

Let us consider what would happen if there were no delay period at all and if the droplets ignited immediately they left the injector nozzle. We should then have a concentration of burning droplets so closely packed that it would be impossible to distribute among them the air needed for their complete combustion. We need therefore a certain delay period in order to allow the droplets time to disperse, to some extent at least, before ignition takes place.

When, as in the earlier types of Diesel engine, air blast is used to inject the fuel, we can afford to dispense almost entirely with the delay period, for the high-pressure air blast serves to disperse and distribute the droplets throughout the combustion chamber, but without air blast, in some form or other, this cannot be done and we require at least a short delay period.

Generally speaking, however, the delay period imposed upon us is greater than we need or desire and our efforts, except in some special circumstances, are devoted towards shortening it as much as we can.

From the above considerations it would appear that the delay period should be constant in time and this no doubt would be the case if the surrounding conditions remained unchanged. As the engine speed increases, so the loss of heat during compression diminishes, with the result that both the temperature and pressure of the compressed air tend to rise, thus reducing the duration of the delay period, and this effect can be intensified to any desired extent by the presence in the combustion chamber of a heat-insulated member whose temperature will rise automatically with increase of speed or load. By such means it is possible to maintain the delay period constant in terms not of time but of crank angle.

It is commonly assumed that in order to complete combustion in the very short time available in a high-speed engine, the liquid fuel should be split up into the smallest possible particles in order to present the largest possible surface/volume ratio; at first sight this would seem a logical conclusion, for clearly the smaller the droplet the sooner it will be consumed.

Other factors, however, enter into the picture and to a large extent contradict this assumption.

(1) The rate of burning depends primarily upon the rate at which the products of combustion can be removed from the surface and replaced by fresh oxygen; in other words, it depends upon the rate at which the burning droplet is moving relative to the surrounding air. Each individual droplet issues from the injector

nozzle at a very high initial velocity and, in most cases, the air also has already been set in motion, so that, at first, the relative motion between the two is very rapid, but the smaller the droplet the less its momentum, and once its initial velocity has been lost, it will merely travel as a passenger along with the air and relative motion will cease; it will then become partially suffocated by its own combustion products, and the conditions will be analogous to those of a stove when the dampers are closed. It is essential therefore that the droplets shall be large enough to maintain their momentum until combustion is at least nearly complete.

(2) Let us consider next the effect of droplet size upon the delay period and upon the rate of pressure rise following this period. Under any given set of conditions as to temperature and pressure, the time taken to form and ignite an envelope of vapour will be independent of the size of the droplet, but the rate and extent of general pressure rise following on such ignition will be dependent upon the area of inflammation. Clearly the smaller the size and the greater the number of droplets the larger will be the aggregate area of inflammation and therefore the greater the rate and extent of pressure rise during this uncontrolled phase.

It would seem then that from the point of view alone of reducing the rate of pressure rise during the second phase, and therefore from that of both smoothness of running and control of maximum pressure, we should prefer to introduce the fuel in the form of one single large dollop, but the subsequent rate of burning would of course be far too slow.

As in all else we must compromise, and aim so to pulverize the fuel as to produce droplets large enough to maintain their momentum nearly to the last, yet small enough to be consumed in the time available. We cannot, of course, produce droplets of a uniform size throughout but we should aim to produce the bulk of them of the optimum size, whatever that may be, but certainly not of the smallest possible size.

To a certain extent we can control the size of the droplets by varying the load on the injector needle; the lighter the load the larger the droplets. Hence we should expect, and in practice we do find, that the lower the injection pressure the lower the rate of pressure rise during the uncontrolled phase and the smoother the running.

Apart from the size of the individual droplets the delay period will depend also upon

(1) the volatility and latent heat of the fuel;
(2) the self-ignition temperature (CETANE-number) of the fuel.

The former will affect the time taken to form an envelope of vapour,

and the latter the margin existing between the temperature of the highly compressed air and the ignition temperature of the fuel.

Clearly the wider this margin the better from both points of view. We can raise the air temperature:

(1) By pre-heating the air before or during its entry to the cylinder.

(2) By employing a very high ratio of compression.

(3) By providing, within the combustion chamber, a heat-insulated member whose temperature will be considerably above that of the compressed air.

At first sight pre-heating of the air would appear to be a simple solution but, in fact, it is most undesirable because:

(*a*) It reduces the density of the air charge, and density is at least as important a factor as temperature—thus we lose on the swings what we gain on the roundabouts. Experiments in the author's laboratory have shown that pre-heating the air by 100° C. reduces the delay angle by barely 2°.

(*b*) It reduces the volumetric efficiency and therefore the power output.

Pre-heating of the air then has little or no effect on the delay period and results in reducing the power and increasing greatly the heat losses; it is therefore thoroughly undesirable. Our aim, on the contrary, should be to get the air into the cylinder as cold as possible.

We can, of course, raise both the temperature and the density of the air by using a higher ratio of compression, but there are practical objections to this. In the first place, in a C.I. engine the volume of the compression space is already very small. The necessity to provide adequate working clearances between the piston and the cylinder head and around the valves compels us to leave thin layers or pockets of air to which the fuel cannot reach; nor can this air join in the general flow pattern. Clearly the higher the ratio of compression, the smaller the clearance volume, and the larger the proportion contained in such outlying pockets. The capacity of such outlying clearance volumes is, of course, determined primarily by manufacturing tolerances and since these are, for the most part, finite, it follows also that the smaller the cylinder the greater the proportion they assume.

It will be found, therefore, that the higher the ratio of compression the smaller the proportion of air we can utilize and therefore the lower the power output. In practice, in the case of a cylinder of about 4 in. diameter with a compression ratio of 16 : 1, the proportion of inaccessible air will be found to be of the order of 20–25 per cent. This air is not, of course, wholly neutralized, for some at least will come

into play later on during the expansion stroke, but it is not accessible at or near top centre when it is most needed.

Again, the higher the compression, the higher the mean pressure, both positive and negative, of the compression work in relation to the effective mean pressure, hence the lower the mechanical efficiency.

In practice the maximum peak pressure is but little affected by the compression ratio, for the higher the ratio and, as a result, the shorter the delay period, the lower will be the rise of pressure on ignition.

It would seem, then, that we can raise the compression ratio only at the cost both of the effective volumetric efficiency and of the mechanical efficiency. In practice we shall use the lowest ratio of compression consistent with the needs both of starting from cold and of light-load running at high speed.

The third alternative, namely, that of employing a heat-insulated member somewhere in the combustion space, obviates most of the objections cited above, provided always that it is so positioned as not to impart its heat to the incoming air. This is easy to provide for in a compression swirl engine, and possible in an induction swirl engine, of either the sleeve-valve four-stroke or the two-stroke type, but it is by no means easy in an open-chamber poppet-valve four-stroke engine. Provided it can be so placed that it is well out of the path of the entering air, such a heat-insulated member will behave as follows:

(1) It will serve the function of raising the compression temperature without reducing the density.

(2) Its temperature will increase with increase of engine speed, and, if suitably positioned and proportioned, it will serve to keep the delay period constant in terms of crank angle, thus allowing of a fixed time of injection being used throughout the entire speed range.

(3) Under all working conditions its surface temperature will be high enough to prevent the deposition of carbon or ash, and if so placed that the jet of fuel impinges against it, it will eliminate completely the building-up of deposits in this zone—a feature of considerable importance, more especially so when fuels containing a high ash content are used.

It does nothing, however, to aid cold-starting unless means could be found for heating it initially, which seems hardly practicable.

CHAPTER II

Detonation and Pre-ignition

It is not within the scope of this book to discuss in much detail the extremely complex subject of detonation, for this has now become too vast a subject; nor to enter into the controversy as to whether the "knock" in the spark-ignition engine is a true detonation in the strict sense of the word, for this is a matter for argument between the physicist and the chemist.

It has for long been realized that it is the incidence of detonation, and of detonation alone, which, in the past, has set a limit to the power output and efficiency of the spark-ignition engine when running on volatile petroleum fuels.

To-day (1952), owing to the great improvements in the processing of petroleum fuels and, to a lesser extent, to the use of dopes such as tetraethyl lead, detonation, though still the limiting factor, no longer maintains quite the over-riding control that it did twenty or thirty years ago.

The mechanism of detonation is the setting-up within the cylinder of a pressure wave travelling at so high a velocity as, by its impact against the cylinder walls, to set them in vibration and thus give rise to a high-pitched "ping".

The broad mechanism, as opposed to the chemistry, of detonation was postulated long ago and can be explained quite simply.

When a combustible mixture of fuel and air is ignited by the passage of the spark, there builds up slowly at first, but with a rapid acceleration, a small nucleus of flame; this spreads outwards with increasing rapidity, and if the mixture were at rest, the film of flame would travel thus in an unbroken front across the combustion chamber. In fact, of course, the film of flame is broken up by turbulence, but this means merely that it proceeds more rapidly and as a ragged rather than a smooth front.

As the flame front advances it compresses ahead of it the remaining unburnt mixture whose temperature is raised both by compression and by radiation from the advancing flame until a point is reached when the remaining unburnt charge will ignite spontaneously, thus setting up a pressure wave which will pass through the burning mixture at an enormously high velocity, such that its impact against the cylinder

walls will give rise to a ringing knock as though they had been struck by a light hammer.

Consideration will show that the incidence of detonation depends firstly upon the degree of heating and compression which the still unburnt mixture can endure, that is, upon the chemical nature of the fuel itself (and upon its temperature coefficient). Secondly, it depends upon the opportunities the unburnt mixture has for getting rid of the heat which is being thrust on it by the rapidly advancing flame front. Thirdly, it depends upon the absolute distance the flame has to travel from the point of ignition. Fourthly, it depends on the time factor, for the reactions in the end gas take some time to develop. It depends yet again upon the degree of turbulence, but this cuts both ways; on the one hand, turbulence serves to assist the unburnt charge in getting rid of its heat and, at the same time, to speed up greatly the advance of the flame front, but, on the other hand, it increases the area of the surface from which heat is being radiated. On balance, the former function outweighs the latter, and increasing turbulence tends to reduce the liability to detonate, but much depends on the actual shape and contour of the combustion chamber. In no case, within the author's experience, has increased turbulence increased the tendency to detonate; in most cases it has much reduced it.

It is, of course, difficult to ascertain what proportion of the total charge is " detonated ", but stroboscopic observation through quartz windows in the combustion chamber and many other less direct pieces of evidence all indicate that the " detonation " of something less than 5 per cent of the total charge is sufficient to produce a very violent knock. Apart from the alarming noise, detonation is dangerous in that, if allowed to persist, it may, and probably will, lead to premature ignition of the whole charge; also it will cause erosion of the piston crown in a manner similar to that of marine propeller blades by cavitation.

In engines working at low duty, or of small size, such as light motor-car engines, detonation is seldom dangerous, for its penetrating and alarming noise always gives ample warning, but in large high-duty and, more especially, highly supercharged engines such as aero-engines, when the general noise level is already very high, it can be exceedingly dangerous and may lead to wreckage of an engine by pre-ignition, followed by piston failure, even before it can be detected audibly.

It is always observed that the incidence of detonation, even if only a slight trace, is accompanied by a considerable increase in the heat flow to the pistons and cylinder walls. This is due, not, of course, to any increase in the total amount of heat released, but rather to the scouring away, by the pressure wave, of the protective boundary layer of more or less stagnant gas adhering to the cylinder walls. It is no doubt this increase in the transmission of heat to the containing walls that gives rise to pre-ignition.

First and foremost detonation depends on the chemical composition and molecular structure of the fuel. Though research workers the world over have been struggling for more than a generation to unravel the physical and chemical changes which control the tendency of a fuel to detonate, yet the problem still seems far from solution.

We know from sampling tests and other observations that the process of combustion involves some extremely complex chemical reactions and that all sorts of products of partial combustion are formed in and just ahead of the advancing flame front. Most of these are transient only, that is to say, they exist and have their being only in certain temperature ranges and, as such, are extremely difficult to track down and identify. It seems probable that one or more of these transient products may act as the fulminate which sets off the charge, but no one has yet been able positively to identify the offender.

We know that certain compounds such, for example, as ethyl nitrite will increase greatly the tendency to detonate, and this seems explainable to the extent that their presence lowers the general level of self-ignition temperature. We know, too, that carbon disulphide when added to petrol will reduce the tendency to detonate despite the fact that it also has a very low self-ignition temperature, so low that it cannot be used neat without pre-igniting even at the lowest compression ratios, but, in this case, we explain the phenomenon by pointing out that carbon disulphide has a very low temperature coefficient. Much more difficult to explain is the action of nitrous oxide, a highly endothermic oxygen carrier, which, by all the rules, should intensify greatly the tendency to detonate but which, in fact, has precisely the opposite effect. No wholly satisfactory theory has yet been put forward to account for the behaviour of lead and thallium, both of which elements, when introduced either in a finely divided metallic form along with the air, or as organic salts soluble in petrol, are remarkably effective in suppressing detonation, though much more so in some hydrocarbon fuels than in others. Presumably they prevent the formation of, or at once react with, some one or more of the products of partial combustion, which otherwise would be serving as a fulminate—probably one or more of the unstable peroxides—but this is not yet proven.

At least we know, from sampling tests from an engine cylinder just before, during, and after the passage of the flame front, that the presence of lead tends to reduce the concentration of both peroxides and aldehydes. Fig. 2.1 is a typical example and is one of many hundreds of such tests carried out in the author's laboratory on an " E6 " variable-compression research engine. In this case, samples were collected by means of a timed sampling valve, which, at an engine speed of 1500 r.p.m., was open for 3 crankshaft degrees only. Samples were taken over the range from 5° before to 10° after top centre. At

the same time the passage of the flame front was recorded by means of ionization gaps and, in this instance, was found to reach the sampling valve at approximately 10° after top centre.

In this particular instance a high-octane petrol was used which detonated normally at a compression ratio of about 9·5 : 1, and a series of samples taken at compression ratios of 7·0 : 1 and 8·0 : 1 when no detonation was observed, at 9·9 : 1 when detonation was very heavy, and again at 9·9 : 1 when all trace of detonation was suppressed by the addition to the fuel of sufficient tetraethyl lead.

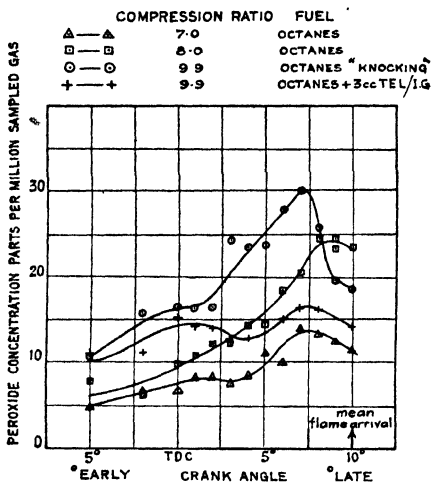

Fig. 2.1.—Pre-flame peroxide concentration

From the results of this test it will be noted that the concentration of peroxides, in parts per million, found in the samples of end gas reaches a maximum in all cases at about 7° after top dead centre, or very slightly ahead of the flame front. The concentration increases as the compression ratio is raised from 7 : 1 to 8 : 1 and still more so at 9·9 : 1 when heavy detonation is occurring. The addition of lead, still at a ratio of 9·9 : 1 but with no detonation, reduces the concentration from a maximum of 30 parts per million to only about 17 parts per million.

Fig. 2.2 shows the aldehyde, mainly formaldehyde, concentration found during the same tests. It will be noted that the concentration of aldehydes reaches its peak somewhat later in the cycle and after, rather than before, the passage of the flame front; also that the addition of lead has substantially the same effect on the aldehyde as on the peroxide concentration.

When collected and admitted to the cylinder along with the air and the same amount of petrol, the more stable peroxides, which alone

could be preserved, are found to be pro-knock, and the formaldehyde anti-knock.

Evidence such as this would certainly support the theory that lead is an anti-detonant by virtue of its ability to suppress the formation of peroxides, but so simple an explanation will not alone suffice.

The problem is complicated further by the fact that there appear to be at least two chemical mechanisms by which knock can occur. One class, which includes most fuels of the higher paraffinic, naphthenic and olefinic types, knocks by a two-stage " low " temperature oxi-

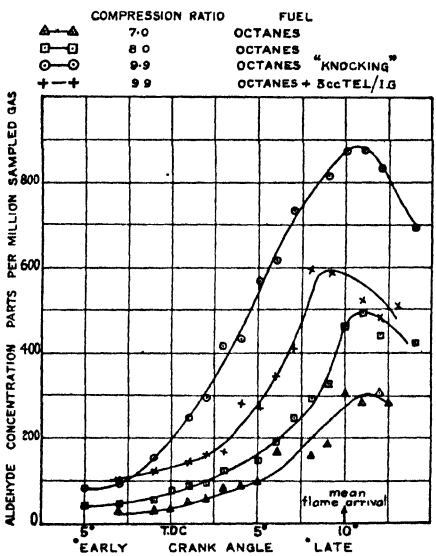

Fig. 2.2.—Pre-flame aldehyde concentration

dation process in which a cool flame is first formed and then followed by the normal hot flame of ignition. Certain fuels, such as methane and benzene, which do not have a " low " temperature peninsula are thought to knock by a " high " temperature process which does not involve cool flame formation.

In agreement with this it is found that formaldehyde (fig. 2.3) which has a pro-oxidant effect in the " high " temperature region, is a pro-knock with methane and benzene in the engine. Conversely in the " low " temperature region, it has an anti-oxidant effect and is an anti-knock in the engine with higher paraffinic-type fuels.

Still more striking perhaps is the effect of *n*-methyl aniline when added to a standard petrol and benzene, see fig. 2.4. Here again the *n*-methyl aniline proves to be an anti-knock in a typical petrol consisting largely of paraffins and an extremely violent pro-knock in a

fuel of the aromatic series (benzene), but in this case the explanation may be a purely thermal one.

Fig. 2.5 shows the effect of tetraethyl lead in concentrations up to 20 c.c. per gallon on a range of fuels, viz. cyclohexane (a typical naphthene component of petrol), iso-octane (a straight paraffin component), and four aromatics ranging from benzene to "benzex bottoms" (mainly xylene). It will be noted that lead is most effective on the paraffin series (iso-octane), a little less so on the naphthene (cyclohexane), while its effect on the four aromatics ranges from almost nil on benzene to " very marked " on the other three.

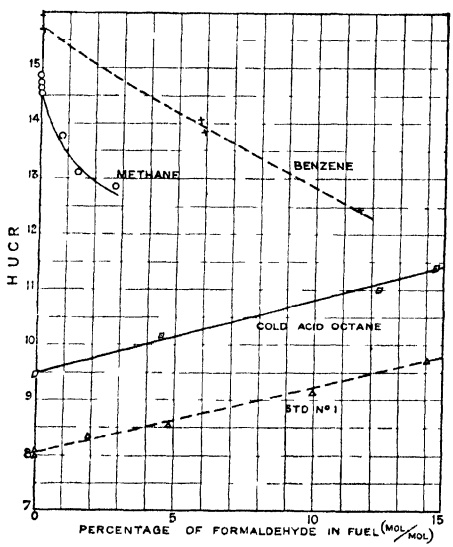

Fig 2.3.—The effect of formaldehyde on the H.U.C.R s (highest useful compression ratios) of various fuels

The above are a few selected examples from many hundreds of similar tests carried out in the author's laboratory, and are included in this chapter to illustrate how complex a problem faces the chemist and petroleum technologist.

Of the straight petroleum distillates, we know, of course, from long experience that those of the aromatic series are far less prone to detonate than the paraffins, while the napthene series occupies a place about midway between the two. Even to-day we still have to rely entirely upon engine tests, preferably in variable-compression engines, to determine the tendency of a fuel to detonate, by observing the highest compression ratio at which the test engine can be run without detonation; this we now express in terms of *octane number*, that is to say, in terms of the equivalent proportion of iso-octane in *n*-heptane

found to give rise to detonation at the same compression ratio as the sample under test; but the simple engine test no longer suffices, for though most fuels will detonate when the mixture is weak, but not when over-rich, their response to mixture strength varies widely and some at least will tend to detonate again when the mixture is excessively rich; others are acutely sensitive to temperature and so on, with the result that to evaluate a sample fuel calls for engine testing under a wide variety of conditions and renders the octane number a dubious measure. More especially does this apply to synthetic petrols of high anti-knock value.

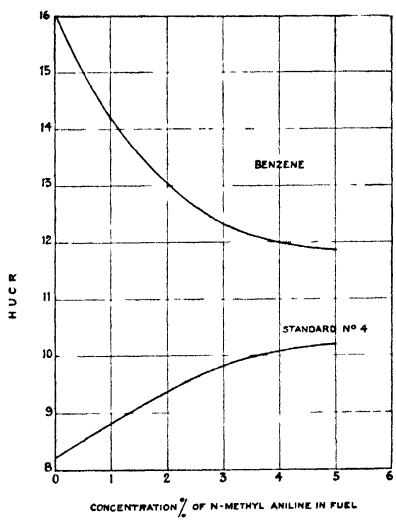

Fig. 2.4.—The effect of *n*-methyl aniline on the H.U.C.R. when added to the fuel

Fuels: Benzene and Standard No. 4

Test Conditions: Engine speed, 1500 r.p.m. Inlet air temperature, 120° C. Engine coolant temperature, 90° C. Solex carburettor

Fig. 2.6 shows the effect of mixture strength on the H.U.C.R. (highest useful compression ratio) of a few typical but representative samples of fuel, from which it will be seen that the tendency to detonate is at a maximum on both methane (paraffin) and benzene (aromatic) at the chemically correct mixture, on both of which fuels the maximum is very sharply defined. On cyclohexane (naphthene) it is at a maximum at about 12 per cent weak, and on iso-octane, with or without lead, at from 10 to 20 per cent rich, but these maxima are much less sharply defined.

We do know, and for many years have known, enough of the mechanism of detonation to enable us to reduce it by appropriate mechanical design, e.g. (*a*) by reducing to the minimum the length of flame travel by using the smallest possible combustion chamber and

placing the sparking-plug as nearly as possible in the centre or, when this cannot be done, by the use of two sparking-plugs at opposite sides of the chamber; (*b*) by taking care that the end gases, most remote from the sparking-plugs, have every possible facility for getting rid of their heat; (*c*) by doing our best to keep the exhaust valve cool and, above all, to ensure that it is as far away as possible from the end gases; (*d*) by the use of sleeve valves which eliminate the need for any uncooled surfaces in the cylinder head and which, by their very geography, provide automatically an almost ideal form with the sparking-

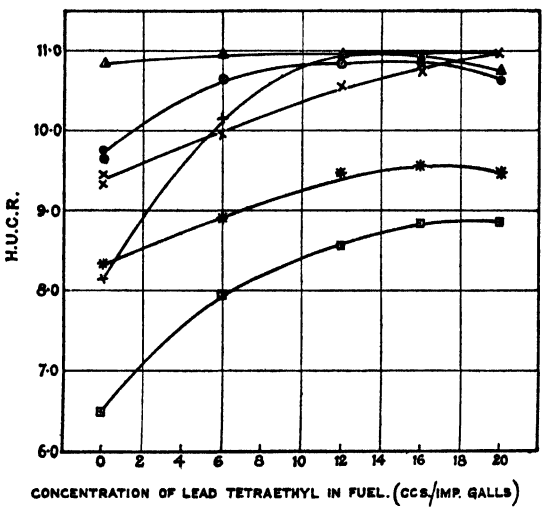

Fig. 2.5.—Effect of tetraethyl lead on the H.U.C.R.s of various fuels

Fuels:

□ — □ — □ cyclohexane. × — × — × cumene.
+ — + — + iso-octane. ○ — ○ — ○ toluene.
* — * — * "benzex bottoms". △ — △ — △ benzene.

Test conditions:

Engine speed, 1500 r.p.m. Inlet air temperature, 120° C.

plug in the centre; (*e*) by employing as high an intensity of turbulence as is consistent with other considerations, such as smooth running and low general heat loss; (*f*) by ensuring that the position of the sparking-plug is such that it will, at every cycle, be scoured of residual inert products of combustion, thus ensuring, as far as possible, uniformity of delay during the first phase of the combustion process, and, for the same reason, (*g*) by ensuring that the ignition spark shall occur at the same phase in every cycle.

All these factors were fully realized and well understood more than thirty years ago and we have probably almost reached the limit of what can be achieved by mechanical design.

Since detonation is initiated only in the end gas, one obvious line of attack is to ensure that the end gas shall consist either of air only,

or at least of a fuel-air mixture too weak to detonate. This implies a very considerable measure of stratification such as can probably be achieved only by fuel injection directly into the cylinder. The best known and probably the most successful example of this line of thought is the Hesselmann engine. In this case, as in a compression-ignition

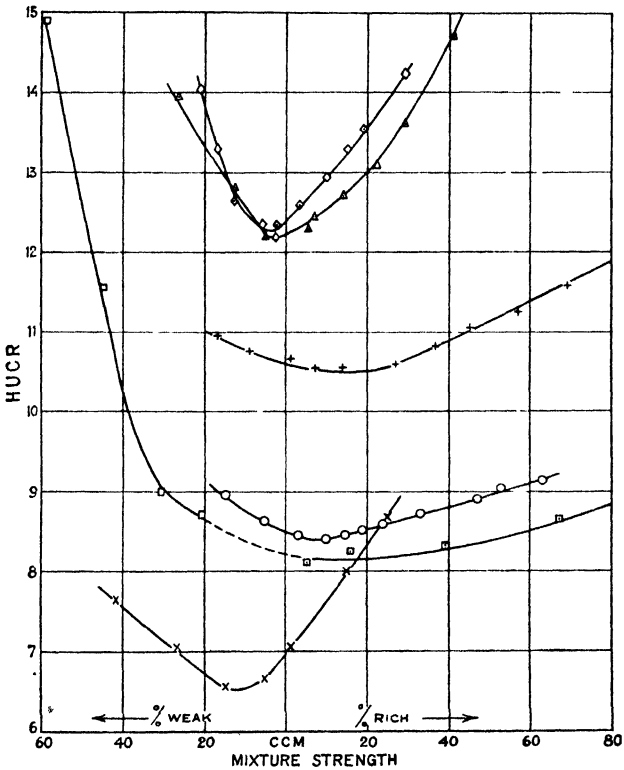

Fig. 2.6—Effect of mixture strength on the H.U.C.R.s of various fuels

Fuels:

× — × — × cyclohexane
○ — ○ — ○ iso-octane
+ — + — + iso-octane + 4 c.c. T.E.L./gal.
△ — △ — △ benzene
◊ — ◊ — ◊ methane
⊡ — ⊡ — ⊡ hydrogen

Test conditions:

Engine speed, 1500 r.p.m. Inlet air temperature, 120° C.

engine, air only is drawn into the cylinder and set into a rotational swirl either by a suitable mask on the inlet valve, or merely by direction at the inlet port. Into this rotating body of air, fuel is injected as a finely atomized spray towards the end of the compression stroke, and ignited by a sparking-plug placed at some distance downstream from the injector, so timed that the passage of the spark shall coincide with the arrival at the plug of the fuel first injected. Thus downstream of the sparking-plug is only pure air, while upstream of it there

is being formed a combustible mixture as the finely pulverized liquid fuel is fed into the passing air stream. At any given moment in the combustion process the only inflammable and unburnt mixture is that contained in the area between the fuel injector and the ignition plug. Downstream of this zone, the products of combustion are chasing the air round the combustion chamber while upstream fresh air is coming into the zone to complete combustion, thus nowhere is there any combustible end gas. By such means Hesselmann succeeded in operating a spark-ignition engine at a high ratio of compression on very low octane fuels such as kerosene and even light gas-oil, provided the latter was sufficiently volatile. Because, like the compression-ignition engine, it can digest a relatively heavy fuel, the Hesselmann engine is frequently, though quite erroneously, described as a Diesel engine. Although by these means it is possible to eliminate detonation, or at least to defer it to a much higher ratio, and so make good use of low octane fuels, yet this result is achieved only at a very high cost in both complexity and sensitivity. Such an engine requires a fuel injection pump and injector, plus electric ignition, plus some automatic means of controlling the supply of air, for, unlike the C.I. engine, it cannot be controlled throughout the entire load range on the fuel admission alone, since there is a limit to the range of air-fuel ratio which can be ignited by spark ignition even with a stratified charge. It embodies therefore all the complexities of both a C.I. and a spark-ignition engine, but as compared with the C.I. engine, it has the advantage that it can operate at lower pressures throughout the cycle.

Again, as to sensitivity, its proper functioning depends upon the timing of both the fuel injection and of the spark, and of the interval between the start of injection and the passage of the spark. At any uniform speed or load, these timings can be found and fixed, but on widely varying loads and speeds they must be varied, and that not always in the same phase relation to one another. So long as the engine is used at constant speed as in a stationary engine, or at a fixed relation between torque and speed, as in a marine engine, it is possible to devise a control mechanism which will afford a good compromise, but as applied to say a motor vehicle, the problem becomes very difficult. In practice this type of engine has been used with success, but chiefly in marine or stationary service.

Influence of Various Factors on Detonation

Apart from the use of dopes in the fuel such as tetraethyl lead or thallium oleate, etc., detonation may to some extent be inhibited by:

(1) *The Use of Cooled Exhaust Products.* In this case the effect of cooling and re-introducing exhaust products is to dilute the oxygen content of the air and thus to lower the flame temperature, but this, of course, has the effect also of narrowing the range of mixture strength,

more especially on the weak side, with the result that what we gain in efficiency by the use of a higher compression ratio, we lose by the necessity of having to use a richer mixture. None the less, if the cooled products are admitted and the mixture enriched only at or near full load, we shall gain the full advantage of the higher compression ratio at reduced loads. If instead of re-admitting cooled exhaust products we merely trap a greater proportion of hot products in the clearance space, then the additional heat they provide will offset, and more than offset, their diluent effect, the flame temperature will be higher and the tendency to detonate increased, and that to premature ignition very much increased.

(2) *The Use of Water.* In the early years of the present century, it was common practice to admit a trickle of water into the vapourizer of kerosene engines; the steam thus formed served as a very effective diluent to inhibit detonation or, as it was then believed, pre-ignition. The method of admission was, however, very crude and relied solely upon manual control, with the result that on light loads the proportion of water became excessive and frequently led to severe corrosion troubles.

In the first years immediately following the 1914–18 war, the supplies of petrol available in Great Britain had an octane number of between 45 and 50 or even lower and were very prone to detonation. At the same time the majority of commercial motor vehicles were fitted with side-valve engines with a flat combustion chamber extending over the whole cylinder and valve box. The combination of a very low-octane fuel with a form of combustion chamber extremely prone to detonate condemned such engines to a compression ratio of something less than 4 : 1 with, in consequence, a very high fuel consumption.

Tests carried out on the author's variable-compression engine had, by this time, shown the value both of water alone and of mixtures of water and both methyl and ethyl alcohol as anti-detonants.

In brief these tests revealed:

(1) That dry steam alone was in itself an effective anti-detonant, but that, as in the case of cooled exhaust gases, both the maximum power, at any given compression ratio, and the mixture range were reduced, due to displacement of oxygen and dilution.

(2) That water was more effective than steam in that its latent heat served both to reduce the compression temperature and to increase the volumetric efficiency to an extent which more than compensated for the displacement of oxygen by steam, but much depended upon when, where, and to what extent the water was evaporated. If complete evaporation took place in the induction pipe or in the cylinder before the closing of the inlet valve, then the full value of its latent heat could be realized, both to increase the

volumetric efficiency and therefore the power output, and to suppress detonation. If evaporation took place during the compression stroke, then it still served as an effective anti-detonant, but no longer as a power augmenter, while any liquid which remained after ignition had taken place served merely to absorb the heat of combustion and so reduce the power output and efficiency without any compensating advantage. In practice, of course, some evaporation occurred at all these stages, and the aim was to complete it as early as possible by thorough pulverization combined, if necessary, with some additional preheating in the form of a local hot spot in the induction pipe against which the water jet impinged.

(3) At that time it was found that the addition of ethyl or methyl alcohol (methanol) was effective in that:

(*a*) It lowered the boiling-point and so ensured that evaporation took place earlier in the cycle.

(*b*) Since methanol is combustible, its addition to the water gave, automatically, that increase in total mixture strength which was needed both for acceleration and to counter the narrowing of the mixture range due to dilution with steam.

(*c*) Methanol vapour has a very high H.U.C.R. and is therefore, in effect, itself an anti-detonant, but unfortunately it is very prone to pre-ignition if used in too strong a concentration.

(*d*) Ethyl alcohol was preferable to methyl in that it was less prone to pre-ignition but, owing to its higher boiling-point, it was inferior from the point of view of power augmentation.

(*e*) Both methyl and ethyl alcohols gave protection against freezing.

On the strength of these observations a form of carburettor was developed with two float-chambers, one fed with petrol and the second with either water alone, or a mixture of water with ethyl or methyl alcohol. The petrol side of the carburettor was normal in every respect, while the water side had a single jet feeding into the choke tube, but controlled by a diaphragm subject to the induction pipe pressure. So long as the pressure in the induction pipe was below a certain predetermined limit, the water jet remained closed and the engine functioned on petrol alone, but on full throttle, or when the induction pipe depression fell below some pre-determined minimum, the water jet was opened by the movement of the diaphragm. Thus control of the water was completely automatic and came into play only when the engine was heavily loaded.

After some preliminary road tests carried out during 1920–21, in which it was found that the compression ratio could safely be increased by approximately one ratio, i.e. from 4·0 : 1 to 5·0 : 1, a number of motor-buses operating in the Midlands and South of England were

equipped and put into regular service with these dual carburettors. Using water alone the gain in overall fuel economy was found, in regular service, to be of the order of 10 per cent. Using an alcohol mixture the saving in petrol was increased to about 15 per cent or only a little more than sufficient to balance the cost of the alcohol. Thus its commercial advantage over water alone was reduced to a slight increase in maximum power and protection against freezing. After a number of buses had been in service for about 18 months the use of the dual carburettor was abandoned because:

(1) The introduction of the so-called turbulent head for side-valve engines, coupled with a slight improvement in the octane number of the fuel available, allowed of a compression ratio of 5·0 : 1 being used without the addition of water, and the smaller gain to be expected from its use at a higher ratio would not have been sufficient to offset the nuisance, even in an organized bus fleet, of having to use two fuels.

(2) A number of troubles cropped up in the course of operation; chief of these were:

(*a*) The quantity of water or water/alcohol used during any given journey varied widely. Although the control was entirely automatic, yet much depended on the manner of driving, and it was found that one driver would use twice as much as another over the same route; hence tankage capacity had to be provided sufficient to meet the worst condition.

(*b*) Considerable trouble with corrosion was experienced, more especially when alcohol was added.

The conclusion reached from this relatively large-scale experiment, extending over many months, was that the use of water, or of a secondary fuel, as a means of suppressing detonation in an unsupercharged engine was not worth while unless the octane number of the petrol available was much below about 50, for the overall saving in fuel was not sufficient to compensate for the added maintenance troubles, and the nuisance of having to supply and carry two fuels, even on so highly organized a service as a motor-bus fleet.

As applied, however, to a supercharged engine, the case is very different, and the use of water or water/methanol mixtures has become almost standard practice for aero-engines and racing-cars; but, in the latter case, where neither fuel costs, nor weight of fuel, come into the picture, even better results can be obtained by employing a fuel in which the water can be carried in solution, i.e. a mainly alcohol fuel, or by the use of a mutual solvent such as acetone, for if carried in solution in the fuel, far better use can be made of the latent heat of the water.

Pre-ignition

In the early days of the petrol engine what we now describe as detonation was invariably attributed to pre-ignition, that is to say, to ignition from some hot spot in advance of the timed spark, and this belief held sway almost until the eve of the first world war, despite a rapidly mounting accumulation of evidence to the contrary. To the best of the author's belief the late Professor Bertram Hopkinson was the first to point out in 1906 that, in his view, the two phenomena were not only quite distinct, but had no direct relation to one another, but his belief went unheeded for several years. In the first place, pre-ignition in itself, as Hopkinson pointed out, does not produce any high-pitched knock; if audible at all, it is merely as a dull thud. Because pre-ignition is frequently brought about as a result of persistent detonation, the high-pitched ringing knock of the latter came quite erroneously to be associated with it.

The process of combustion when initiated by a hot spot or surface appears, so far at all events as the second stage is concerned, to be exactly the same as when initiated by a high-tension spark, and when both occur at the same phase in the cycle, they are indistinguishable either on the indicator diagram or by ionization indicators, that is to say, for any given degree of turbulence, the rate of pressure rise and the movement of the flame front appear to be exactly the same. Whether the time taken to develop the initial nucleus of flame is also the same is, of course, uncertain, for without a timed spark, no means exist of determining the exact time when inflammation is first initiated. It is by no means uncommon for pre-ignition—or in this case it would be more correct to describe it as auto-ignition—to occur at the same phase as the timed spark, in which case the ignition can be switched off, and the engine will continue to run perfectly steadily without the slightest observable change in performance, sound, or any other characteristic. Under such circumstances it is, of course, quite harmless. The danger lies in the fact that all control of timing is lost and ignition may creep earlier and earlier in the cycle.

The danger of pre-ignition lies not so much in the development of high pressures but rather in the very great increase in heat flow to the piston and cylinder walls when ignition occurs too early in the cycle; the increase in heat flow in turn raises still further the temperature of the hot spot or surface which is initiating pre-ignition and so causes still earlier ignition until such a temperature is reached as actually to ignite the incoming charge and so fire back into the carburettor. The belief, still widely held, that pre-ignition can give rise to dangerously high cylinder pressures is quite unfounded. Under no circumstances is the peak pressure resulting from pre-ignition appreciably higher than from a spark-initiated ignition and, in both cases, the peak is

reached when the maximum pressure is attained at or just after top dead centre, that is to say, about 10° earlier than the normal optimum. As the time of ignition is further advanced either by advancing the time of the spark or by earlier pre-ignition, the maximum cylinder pressure falls again due to the excessive heat loss, for the piston is then compressing gas at or about its maximum temperature, and the intensity of heat flow is increased many times. The danger lies not in the production of excessive pressures but of excessive heat flow. In a single-cylinder engine pre-ignition is usually harmless; if allowed to proceed unchecked the power output will gradually die away and, provided there is no detonation, the engine will slowly and silently come to rest. The serious danger occurs when pre-ignition develops only in one or more cylinders of a multi-cylinder engine, then the remaining cylinders will carry on at full speed and power, dragging the pre-igniting cylinder after them. The intense heat flow in the affected cylinder will then probably result in piston seizure followed by the breaking-up of the piston with catastrophic results to the whole engine.

When using ordinary petrol as fuel, pre-ignition is generally, though not always, caused by persistent detonation. As mentioned earlier detonation tends to increase the heat flow generally and so to raise the temperature of any already hot spot such as the sparking-plug electrodes, but with benzole, for instance, or methyl alcohol, pre-ignition will usually occur without any trace of detonation and therefore without any audible warning.

In nine cases out of ten, pre-ignition is initiated by overheating of the sparking-plug electrodes. In the early days of the fuel research in the author's laboratory, the best sparking-plugs available were liable to cause pre-ignition at high ratios of compression, and because of the early incidence of pre-ignition, it was not then possible to explore the detonation tendencies of many fuels such as those of the naphthene or aromatic series, or of the alcohol group. Since those days there have been great improvements in the design and manufacture of sparking-plugs, but, none the less, the danger of pre-ignition still remains.

With the rapid increase in the performance of military aero-engines, just before and during the second world war, combined with the introduction of high-octane petrols, the danger of pre-ignition became once again very acute, and there was little room for doubt that the wreckage of many aero-engines by piston failure was due to pre-ignition. So serious did the trouble become that in 1942 a fresh research was started in the author's laboratory into the effect of various fuels on the tendency to pre-ignite, while a parallel investigation was being carried on into the working temperatures and cooling of sparking-plug electrodes.

For this research a special version of the "E6" variable-compression engine was designed and constructed in which every effort

was made to ensure the most effective cooling of the piston, cylinder head, exhaust valve, and sparking-plug body, and a special "pre-igniter" whose temperature could be controlled was fitted in the cylinder head on the side opposite to the sparking-plug. In actual fact two different forms of "pre-igniter" were developed, one of which (see fig. 2.7) consisted of a coil of "Nimonic" wire whose temperature could be raised electrically to any desired degree. The second form used for supercharging tests consisted of a thermally insulated thimble of heat-resisting material projecting into the combustion chamber and cooled by a flow of air through the hollow body (see fig. 2.8). Both forms served their purpose well and both showed agreement in their assessments of the various fuels, etc., the essential difference between them being that one represented a localized hot spot, not unlike the electrodes of a sparking-plug, and the other a more extensive hot surface and, as such, was more comparable to an exhaust-valve head.

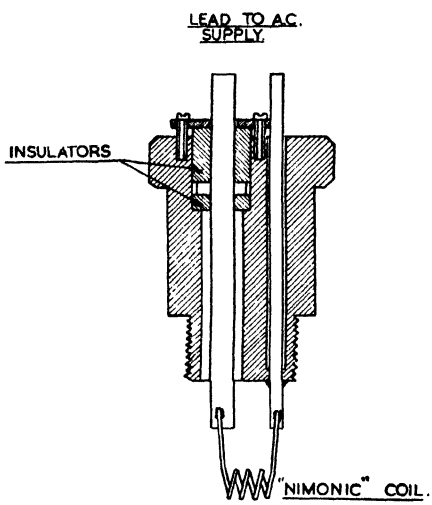

Fig. 2.7.—Pre-ignition plug (hot-wire type)

The first difficulty to be overcome was how to determine when pre-ignition was occurring, for, as explained earlier, the behaviour of the engine was, in every comparable respect, precisely the same whether ignition was initiated by the passage of the spark or by the pre-igniter so long as it occurred at the same phase in the cycle; none the less it was essential to know exactly when and under what conditions auto-ignition was initiated. Of course, after a while, the auto-ignition advanced itself and so became evident, but by this time the temperature of the pre-igniter had risen far beyond the critical. After many attempts the following method, initiated and developed by the N.A.C.A., was adopted. The pre-igniter was situated at the opposite side of the combustion chamber and therefore as far remote as possible from the sparking-plug, thus the flame front initiated by the sparking-plug did not reach the pre-igniter until almost the end of its travel. An ionization gap was fitted close alongside the pre-igniter to record by a signal on a cathode-ray screen the arrival and passage of the flame front. When running under normal full-load conditions, with optimum spark timing, the flame front did not reach the ionization gap till about 10° after top centre, but when

ignition was initiated by the pre-igniter the flame passed the ionization gap and was signalled on the screen some 10° or 15° earlier.

The test procedure was to run up to full load on spark ignition and note the signal from the ionization gap, then gradually to raise the temperature of the pre-igniter until the ionization gap signalled a much earlier passage of the flame, at first intermittently, but very soon consistently, although the performance of the engine remained

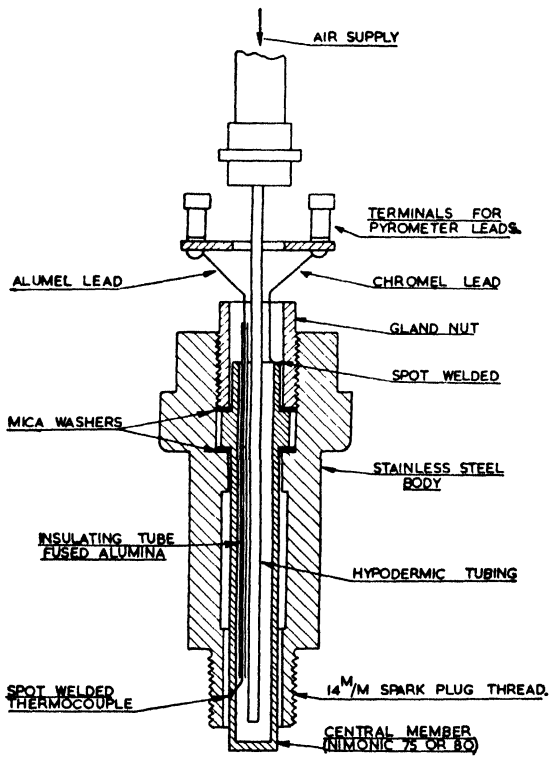

Fig. 2.8.—Pre-ignition plug (thimble type)

unchanged. As an occasional check, once the ionization signal had shifted to the earlier station, the ignition was switched off, when the engine carried on quite normally, thus confirming that the pre-igniter had taken charge. This technique, when fully developed, proved very satisfactory and consistent and was adopted throughout all the subsequent tests. In later tests the pre-igniter coil was made in two parts, one of Alumel and the other of Chromel, forming a thermocouple junction in the middle coil. The hot-thimble pre-igniter was also similarly converted into a pyrometer. The resultant thermal e.m.f. gave a measure of the actual temperature. Fig. 2.9 shows the

layout of the cylinder head with the pre-igniter, ionization gap, and sparking-plug in position.

A very large number of tests were made on various fuels, at various ratios of compression, different mixture strengths, etc.

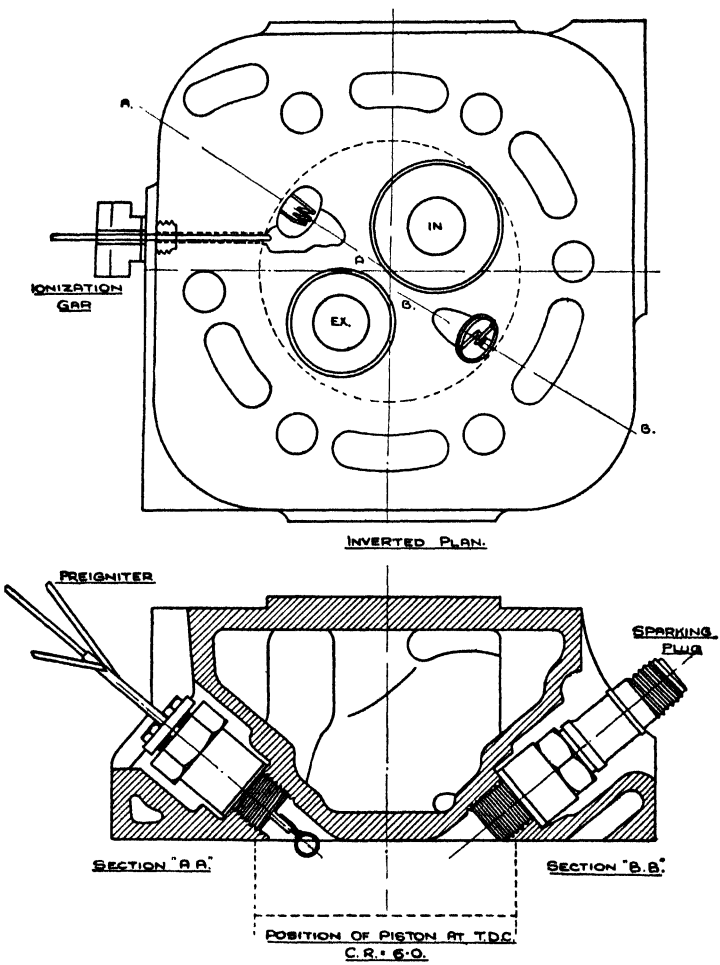

Fig. 2.9.—Diagram showing position of pre-igniter, ionization gap and sparking-plug in cylinder head

It was found, as would be expected, that on all fuels tested the tendency to pre-ignite was at its maximum at the mixture strength giving maximum flame temperature, i.e. round about 10 to 15 per cent rich.

No tangible relationship was found between the tendency to detonate and to pre-ignite; thus Table I gives the observed results of tests

on a wide range of fuels. In column 1 is given the relative resistance to pre-ignition in terms of iso-octane = 100 and cumene = 0. In the second column is given the corresponding H.U.C.R. in the same engine with the pre-igniter removed. It will be noted that there is very little relationship between the two. The first seven fuels and the last in the table are all samples of relatively high-octane petrols composed for

TABLE I

PRE-IGNITION AND KNOCK RATINGS OF A SELECTION OF FUELS

Fuel	Pre-ignition E6	Knock rating E6 H.U.C.R.
Iso-octane (2–2–4 trimethyl pentane) ..	100	10·96
Hot-acid octanes	72	10·85
Neohexane	80	9·85
Isododecane	66	9·30
Alkylates	77	10·05
Hydropetrol	56	7·95
Hydropetrol + 6 ml. T.E.L./imp. gal. ..	75	11·80
Cyclohexane	< 0	8·20
Benzene	30	14·60
Toluene	91	15·00
Xylenes (mixed)	> 100	11·25
Cumene (isopropyl benzene)	0	12·55
Victane (iso & *n*-butyl benzene)	10	10·30
Pseudo-cumene (1–2–4 trimethyl benzene)	98	9·65
Mesitylene (1–3–5 trimethyl benzene) ..	100	—
Di-isobutylene	50	10·00
Methyl alcohol	< 0	*c.* 15·00
Isopropyl alcohol	*c.* 60	*c.* 14·00
Acetone	*c.* 75	*c.* 18·00
Methyl ethyl ketone	< 0	15·00
B.A.M. 100 octane reference fuel (15·2% aromatics, 5·47 ml. T.E.L./imp. gal.) ..	77	12·4

the most part of paraffins; among this group it will be noted that there is some relationship between the tendency to detonate and to pre-ignite. The next sample, cyclohexane, a typical member of the naphthene group, has a moderately high H.U.C.R. of 8·20 : 1, but its pre-ignition number is less than 0 on the octane-cumene scale. The next group in the table are all aromatics. It will be noted that there is no consistency among them. Benzene at 14·6 : 1 and toluene at 15·0 : 1 have the highest H.U.C.R. Cumene at 12·55 : 1 comes next and xylenes at 11·25 : 1 next, in order in their relation to detonation, but as regards their tendency to pre-ignite, the xylenes are the least prone of all, and even better than iso-octanes. Toluene comes next at 91, benzene at only 30, and cumene at 0.

In the next group are the alcohols and ketones, all of which have very high H.U.C.R.s, ranging from acetone 18·0 : 1 to isopropyl alcohol 14·0 : 1. All these are very prone to pre-ignition more especially methyl alcohol and methyl ethyl ketone, both of which appear as well below zero on the arbitrary scale. That pre-ignition, has not proved more troublesome in practice on the alcohol fuels is probably due to the fact that in their commercial form they all contain at least a small proportion of water, and water is a very effective inhibitor of pre-ignition.

Of the anti-knock dopes it was found that lead had a small effect in inhibiting pre-ignition, more especially in petrols of the paraffin series; in this respect its behaviour is akin to that in relation to detonation.

Aniline and monomethylaniline which are effective anti-knocks in some fuels had apparently no effect at all as inhibitors of pre-ignition.

The author has perhaps rather laboured this question of pre-ignition, because it is one to which scant attention has been paid. We are accustomed nowadays to focus all our attention on the subject of detonation, for it is the limiting factor controlling the performance of a spark-ignition engine. We are apt to forget that the real danger is that it leads on to pre-ignition. In itself detonation is not dangerous; it is the pre-ignition it gives rise to that can so easily wreck an engine.

CHAPTER III

Efficiency

While there are many possible cycles of operation, two only are in general use, both of which are practical and efficient:

(1) In which the air is first saturated with the quantity of fuel needed for combustion, then compressed and, after compression, the mixture is ignited and burnt at constant volume; the highly heated air is then allowed to expand, doing work on the piston until it has reached its original volume, when it is released.

(2) In which air alone is compressed and, after compression, the fuel is forced into the cylinder and burnt as it enters; the rate of fuel admission being such that the pressure remains substantially constant throughout the combustion process, despite the outward movement of the piston and therefore the increase in volume. The supply of fuel is then cut off and the highly heated air allowed to expand as before, until its original volume is reached.

These two cycles are generally termed constant volume and constant pressure cycles. Between them there are many compromises; in fact, all practical working cycles are to some extent intermediate between these two limits. There are, however, many possibilities; for example, the air may be expanded to a volume considerably greater than it occupied before compression, in which case the efficiency will be higher, for, whether the cycle be a constant volume or a constant pressure one, the efficiency depends primarily upon the ratio of expansion.

Before considering the possible efficiency of these cycles it is well to point out one factor which has a most important influence in practice, namely, that high maximum pressures necessitate heavy moving parts, heavy piston-ring loading, and, therefore, high frictional losses, so that for equal mean pressures the cycle which will yield its efficiency at the lowest maximum pressure will always show to advantage in practice.

Of the two cycles quoted above, and for the same compression ratio, the constant volume cycle is necessarily the more efficient, because expansion starts at once, whereas in the true constant pressure cycle, expansion starts only after the period of fuel admission is over, as is illustrated by fig. 3.1 and 3.2. Fig. 3.3 shows the two cycles superim-

posed from which the extra work obtained in the former case from the same expenditure of fuel is apparent.

(1) In the above figures the two heat cycles are compared at the same low ratio of compression, viz. 7 : 1, in order to emphasize

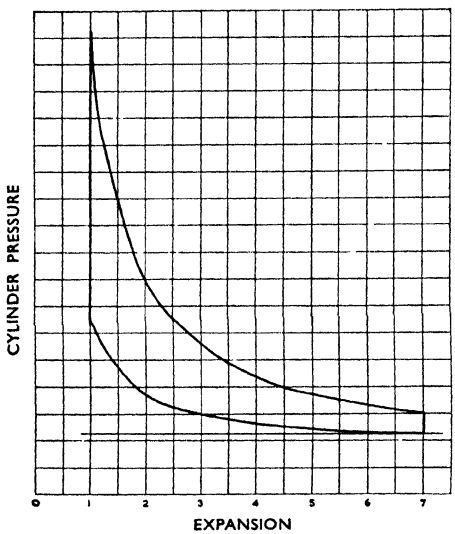

Fig. 3.1.—Constant volume cycle

their difference, and for comparative purposes only. This is not a just comparison because in the case of the constant pressure cycle, since

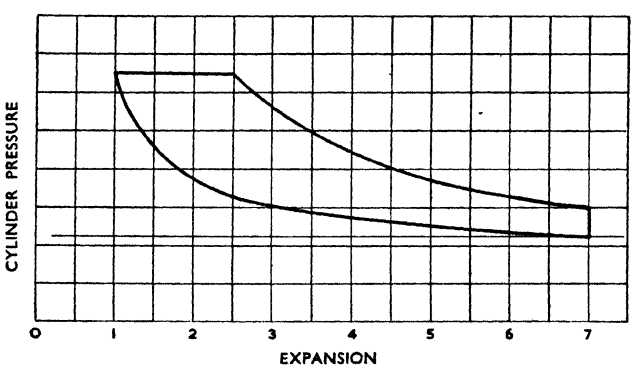

Fig. 3.2.—Constant pressure cycle

air only is present in the cylinder during the compression stroke, a very much higher ratio of compression may be, and in fact must be, used. Hence, although expansion starts later in the stroke, none

the less the overall ratio of expansion is generally greater in the constant pressure than in the constant volume cycle, even when the maximum amount of fuel is supplied, while at reduced fuel deliveries the ratio of expansion is greater still.

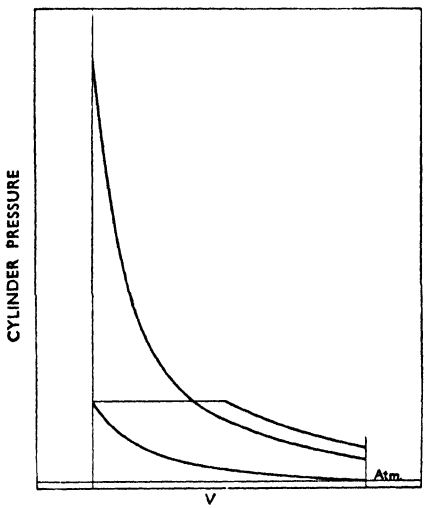

Fig. 3.3.—Superimposed constant volume and constant pressure cycles

(2) It would appear also from the comparative diagrams that the ratio of mean effective to maximum pressure is more favourable in the case of the constant pressure cycle—this, however, is not the case when the two heat cycles are compared each at the compression ratio best suited to the fuels they use, and still less so when the departures from the ideal cycles imposed by the combustion conditions are taken into account.

Air-cycle Efficiency

Let us consider first the constant volume cycle which approximates to that on which most normal spark-ignition engines operate. If the working medium consisted solely of pure dry air, and if there were no interchange of heat to or from the cylinder walls, the efficiency E would be given by the formula

$$E = 1 - \left(\frac{1}{r}\right)^{\gamma-1}$$

where r is the expansion or, as it is more commonly termed, the

compression ratio, and γ is the ratio of the specific heats of air at constant pressure and at constant volume. Then

$$\gamma = \frac{0{\cdot}2405}{0{\cdot}1715} = 1{\cdot}402, \text{ or, say, } 1{\cdot}4.$$

The latter is the value generally accepted by engineers.

According to this formula which is generally known as the air cycle, the efficiency depends solely upon the ratio of expansion, and therefore of compression, and is independent of the temperature. Though it does not pretend to give a true value for the possible efficiency of the cycle, it none the less serves as a most convenient basis for comparison. According to the above formula the air-cycle efficiency, for a range of expansion varying from 4·0 : 1 to 20·0 : 1, is shown in Table I and in the graph, fig. 3.4.

TABLE I

Expansion ratio	Air-cycle efficiency
4·0 : 1	42·6
5·0 : 1	47·5
6·0 : 1	51·2
7·0 : 1	54·0
8·0 : 1	56·5
9·0 : 1	58·5
10·0 : 1	60·2
11·0 : 1	61·7
12·0 : 1	63·0
13·0 : 1	64·2
14·0 : 1	65·2
15·0 : 1	66·1
16·0 : 1	67·0
17·0 : 1	67·8
18·0 : 1	68·5
19·0 : 1	69·2
20·0 : 1	69·8

The air cycle, though useful as a basis for comparison, is not strictly applicable for a number of reasons, the more important of which are:

(1) The working medium does not consist solely of pure dry air, but of a mixture of nitrogen and the products of combustion.

(2) The specific heat of the products of combustion increases with increase of temperature, so that heat added at the higher temperatures does not produce the same increase in temperature and pressure as at the lower.

(3) At very high temperatures the products of combustion tend to dissociate, the CO_2 breaking down into CO and O_2 and the water vapour into H_2 and O_2. This dissociation involves the absorption of a considerable amount of heat, which is not all returned.

(4) There is some loss of heat to the walls of the combustion space.

(5) The final products of combustion do not, at the same temperature and pressure, occupy the same volume as the original fuel and air mixture. The volume occupied may be greater or less according to the chemical composition of the fuel.

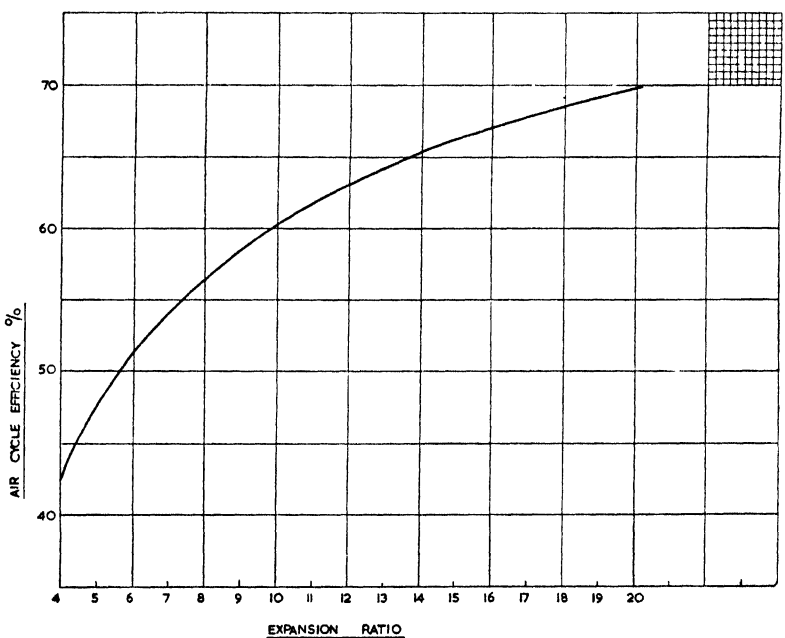

Fig. 3.4.—Air-cycle efficiency

The discrepancies, as compared with the air-cycle standard, due to change of specific heat, to dissociation, and to direct heat loss to the cylinder walls, are all dependent upon the flame temperature, and all increase rapidly as the temperature is increased. It has been shown, however, in Chapter I that in the case of the spark-ignition engine, the range of flame temperature over which the engine can operate is very limited except in the case of certain gaseous fuels such as hydrogen; for unless the air is fully or very nearly fully saturated with fuel, the latter will not burn with sufficient rapidity, while, if there is any excess of fuel present, it affects the temperature but little, for once the whole of the oxygen in the cylinder is combined, no more fuel can be burnt

and any excess merely passes to waste without anything more than a purely secondary effect upon the temperature or pressure of the cycle—a secondary effect which may, however, be very important in its influence on the tendency to detonate.

So long as no additional inert or partially inert gases are present other than the small proportion of exhaust products left behind from the preceding cycle, the temperature of combustion will be, in round figures, about 2500° C. after allowing for the factors mentioned previously, and assuming that the direct loss of heat to the cylinder walls is reduced to the minimum possible. This figure is based on a compression ratio of about 5·0 : 1; at higher compression ratios the tem-

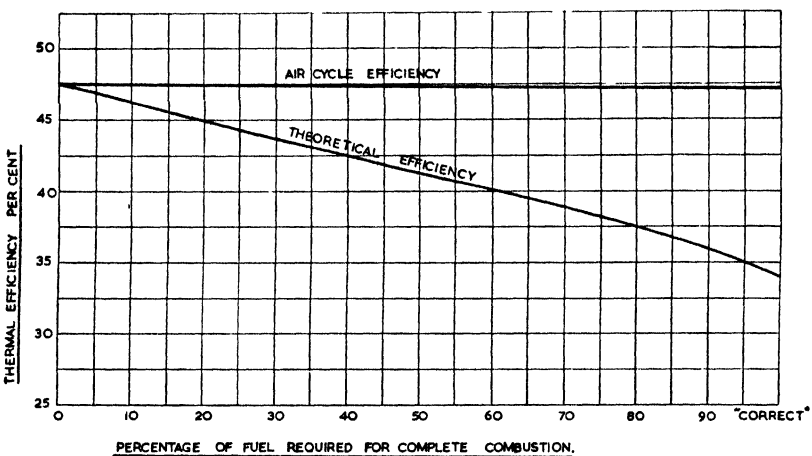

Fig. 3.5.—Curve showing theoretical increase in thermal efficiency with weak mixtures

perature of combustion will be increased, due both to the smaller proportion of residual exhaust gas and to the higher temperature of the compressed mixture prior to ignition; the former will tend to reduce the amount of dilution by inert gas and the latter to raise the temperature at the starting point of combustion and so increase the flame temperature by a like amount. Both effects are, however, quite small in so far as they influence either the thermal efficiency relative to the air cycle or the range of mixture strength, but they have a very important and indeed decisive influence on the tendency to detonate.

Were it possible by any means to burn a smaller proportion of fuel, as is possible in the case of the constant pressure cycle, then the mean temperature of combustion would be lower, the losses would be reduced, and the efficiency at any compression ratio would rise as the fuel or heat supply is reduced until, at the point of no heat supply, it would coincide with that of the true air cycle, as shown in fig. 3.5, which gives

the theoretical efficiency for a petrol-air mixture at a compression ratio of 5 : 1.

The term "efficiency" is here taken to mean the proportion of the total heat liberated by the combination of the fuel with the oxygen in the air, which appears as useful work on the piston. It is customary to reckon the efficiency of any heat engine from the heat value of the fuel supplied, and since it is the fuel alone and not the air which costs money, this is, of course, the practical aspect. In the case of the constant-volume or spark-ignition engine and more especially when it is using a liquid fuel, a more accurate determination of the true efficiency can generally be obtained from the consumption of air, since every pound of air will, by the combination of its oxygen with the fuel, liberate a definite amount of heat, whether it be saturated or supersaturated with fuel. This distinction becomes the more marked when a number of cylinders draw their supply of fuel from a single mixing-chamber or carburettor which may be, and probably is, supplying an excess of fuel to one or more cylinders; or again an appreciable amount of lubricating oil may be being burnt as fuel.

If the efficiency be deduced from the weight of fuel consumed by such an engine, we may arrive at either too high or too low a figure for, on the one hand, some of the fuel is probably being wasted and, on the other, some of the lubricating oil is being burnt as fuel, but if it be measured from the weight of air consumed, we shall, so long as the air is saturated or supersaturated, arrive at a true value.

With all the more usually available liquid fuels or lubricants, the heat liberated by their combination with 1 lb. of air is, in round figures, about 1300 B.Th.U. irrespective of the calorific value of the fuel. Actually it varies a little, but over the whole range of the normally available liquid fuels it lies between the limits of 1275 and 1335 B.Th.U. per lb., an extreme variation of less than 5 per cent, while for all petroleum fuels it may be taken as 1290 B.Th.U. per lb. to within 1 per cent; for commercial benzol 1320 B.Th.U. and for commercial alcohol 1330 B.Th.U.. Table II (p. 54) gives in more detail the heat liberated by the combination of 1 lb. of air with six representative samples of petrol and with benzol, ether, and alcohol.

At first glance it would appear that alcohol should yield a somewhat higher temperature, and therefore a higher power output, but this is not necessarily the case, for although 1 lb. of air when combined with ethyl alcohol will liberate more B.Th.U.s than when combined with, say, petrol, yet against this must be offset the fact that the volume of alcohol vapour required for complete combustion is about three times that of the equivalent petrol vapour, and therefore correspondingly more air must be displaced to make room for it.

In the last column is given the heat liberated per standard cubic inch of mixture (i.e. fuel vapour and air), from which it will be seen

TABLE II

Fuel	Effective lower calorific value (B.Th.U. per lb.)	Air-fuel ratio	Heat liberated by 1 lb. of air (B.Th.U.)	* Heat liberated per standard cubic inch of mixture giving complete combustion
Petrol samples				
(1)	19,020	14·7	1295	48·5
(2)	19,120	14·8	1293	48·53
(3)	18,900	14·6	1295	48·35
(4)	19,090	14·9	1282	48·59
(5)	19,250	15·0	1285	48·54
(6)	18,920	14·7	1288	48·31
Benzol	17,500	13·2	1320	47·7
Ether	16,830	13·0	1295	49·3
Ethyl alcohol (95%)	11,125	8·4	1330	46·9

that the position is reversed, and that in fact less heat is liberated by the combustion of an alcohol/air mixture.

It is true that more power is obtained from ethyl alcohol than from, say, petrol or benzol, but this is due rather to the fact that, owing to its higher latent heat of evaporation, the final temperature of the mixture at the end of the suction stroke is lower, and the density of the charge correspondingly greater.

Specific Heat

We have shown that the air-cycle efficiency is not an attainable ideal, because the medium with which we are working is not pure dry air, and also because some loss of heat to the walls of the cylinder is inevitable. We may examine these factors a little more closely and try to assess their influence.

The working fluid in, say, a petrol engine consists at first of nitrogen, oxygen, petrol vapour, and a small proportion of exhaust products left behind from the previous cycle in the clearance volume of the cylinder. After combustion, and neglecting the presence in minute quantities of products of partial combustion, the working fluid consists of nitrogen, carbon dioxide, and water vapour. Apart from the chemical change which the working fluid has undergone, its physical properties also have changed quite appreciably.

The specific heat of most gases increases with increase of temperature but the rate of increase varies very considerably as between nitrogen, carbon dioxide, and steam. The change in specific heat with temperature, for the three principal constituents of the working fluid, is approximately as shown in Table III.

* Allowing also for increase of specific volume.

TABLE III

MEAN INCREASE IN SPECIFIC HEAT FROM 100° C. TO 3000° C.

	100° C. up to 500° C	1000° C.	1500° C.	2000° C.	2500° C.	3000° C.
Nitrogen ..	1·00	1·02	1·065	1·11	1·16	1·22
Water vapour	1·00	1·11	1·22	1·35	1·55	1·79
Carbon dioxide	1·00	1·155	1·22	1·27	1·32	1·33

The increase in the specific heat of the working fluid means of course that the heat given out by combustion is not accompanied at the higher temperatures by a corresponding increase in pressure. It will be seen that nitrogen, which forms by far the bulk of the working fluid, is the least susceptible to change at the higher temperatures, while the specific heat of water vapour increases very rapidly.

Since the temperature range in which we are most interested is that from 2000° C. to 3000° C., it follows that of the two constituents other than nitrogen, carbon dioxide is preferable to water vapour, and therefore that in this one respect a fuel containing a high percentage of carbon and burning down to carbon dioxide is preferable to one containing a large proportion of hydrogen. There are, however, other considerations which favour the hydrogen content.

It is the increase of specific heat at high temperatures, above all other factors, which controls our possible efficiency, and a glance at the above table is sufficient to indicate how far short of the air-cycle efficiency we must inevitably fall, and how desirable it becomes to work at the lowest possible maximum temperature.

Dissociation

At very high temperatures both water vapour and carbon dioxide break down to a certain extent and a considerable amount of heat is absorbed thereby. The degree of dissociation, in both cases, is dependent upon pressure as well as upon temperature, so that it is influenced to a small extent by the compression ratio of the engine. This absorption of heat is by no means a total loss, for much of it is returned as the temperature and pressure fall during the course of the expansion stroke; some of the heat is returned quite early in the stroke and can be utilized throughout the remainder of the expansion, but some is not returned until near the end when it is of but little value, while recombination is seldom quite complete, even when the exhaust valve opens. The longer the expansion the lower will be the final temperature; hence again the loss by dissociation is dependent, to some extent, upon the ratio of expansion or compression, for not only will dissociation

be less under the higher pressure, but the longer expansion will permit of more recombination. On the whole, the effect of dissociation, in so far as it influences the power and efficiency of an engine, is comparatively small, but, since its extent depends largely upon the composition of the products of combustion and upon the compression ratio, its influence can certainly not be ignored.

Tables IV and V indicate the degree of dissociation in terms of percentages at different pressures and temperatures.

TABLE IV

DISSOCIATION OF WATER AT DIFFERENT PRESSURES AND TEMPERATURES

Temperature (°abs.)	Pressure (atmospheres)			
	0·1	1·0	10·0	100·0
1500	0·403	0·02	0·009	0·004
2000	1·25	0·58	0·27	0·125
2500	8·84	4·21	1·98	0·927
3000	28·4	14·4	7·04	3·33

TABLE V

DISSOCIATION OF CARBON DIOXIDE AT DIFFERENT PRESSURES AND TEMPERATURES

Temperature (°abs.)	Pressure (atmospheres)			
	0·1	1·0	10·0	100·0
1500	0·104	0·048	0·0224	0·01
2000	4·35	2·05	0·96	0·445
2500	33·5	17·6	8·63	4·09
3000	77·1	54·8	32·2	16·9

Here again we are chiefly interested in the temperature range from 2000° to 3000° abs. and the pressure range in the neighbourhood of 10 to 100 atmospheres. Over this range it will be seen that the degree of dissociation is greater in the case of CO_2 than of H_2O, so that although the total dissociation is comparatively small, the CO_2 is, in this respect, far more susceptible than the water vapour, and its influence goes far to minimize the advantage it held in regard to increase of specific heat. We find, then, that a fuel containing a large proportion of hydrogen is at a disadvantage on the score of the greater increase in specific heat at high temperatures, while one containing a large proportion of carbon is at a disadvantage on the score of a very much

greater degree of dissociation. These two factors tend to balance one another, so that we cannot argue that either carbon or hydrogen is preferable as the main constituent on the combined grounds of dissociation and change of specific heat. We may conclude therefore, as is indeed the case, that the nature and chemical composition of the fuel, so long as it consists only of carbon and hydrogen, has no perceptible influence on the efficiency of an engine, or on the power output either, so long as it is delivered in a vaporized form. This is entirely borne out in practice, where it is found that all pure hydrocarbon fuels, no matter what their composition or heat value may be, give, at the same compression ratio, the same power output and the same thermal efficiency to within less than 1 per cent so long as they are vaporized and delivered to the cylinder at the same temperature.

Direct Heat Loss

Since it is clearly out of the question to maintain the temperature of the cylinder walls at, or anywhere near, that of the gases within them, it follows that there must necessarily be some interchange of heat between the gases and the containing walls, more particularly at the higher temperature period of the cycle, though the heat given up by the cylinder walls during the cold period of the cycle plays a secondary, but none the less a very important, part. The actual extent of the loss by interchange of heat between the gases and the cylinder walls cannot be assessed once and for all, because it depends upon the size and speed of the engine, upon the form and area of the combustion chamber, and upon many other factors, such as turbulence or air-swirl; it is, therefore, unlike the preceding items, an individual and a variable factor. We will deal with it in more detail later but, at the moment, it is sufficient to state that it is not of the magnitude commonly supposed. In a well-designed engine under normal full-load running conditions the net loss from this source is of the order of only 3 to 4 per cent of the total heat of the fuel, and, even in the most extreme cases, it seldom exceeds about 6 per cent, for it must be realized that of the total heat carried away by the cooling water, only a small proportion could, in any event, have been utilized. A large proportion of the heat so carried away has been given up to the cylinder walls and exhaust passages during the exhaust stroke, while, of the remainder, much has been given up so late in the expansion stroke that only a trifling proportion of it could have been converted into useful work.

This source of loss is clearly dependent upon temperature and would diminish if the flame temperature could be reduced.

Lastly, the products of combustion when cooled down to their original temperature do not occupy the same volume as the fuel vapour and air from which they are formed. In the case of all liquid hydrocarbon fuels and still more in the case of the alcohol group, the volume,

after combustion, is slightly greater, and this confers a small advantage which increases as the mixture strength is enriched.

In addition to the above we have to take into account the fact that no spark-ignition engine operates strictly on the constant volume cycle, for neither is combustion instantaneous, nor is expansion carried to the very end of the stroke, for, in order to empty the cylinder in the time available, the exhaust valve must be opened well before the end of the stroke. The effect of these divergencies from the theoretical is to lop off the sharp corners of the indicator diagram and so reduce its area by a matter of three or four per cent.

When a minimum value is taken for direct loss to the cylinder walls and for the effect of the " diagram factor " it will be found that the attainable efficiency of a spark-ignition engine having a cylinder size of not less than one litre is approximately 74 per cent of the air-cycle efficiency when operating on petrol with an economical mixture, namely, with a fuel/air ratio 85 per cent of the chemically correct, In the case of the best modern aero-engines an indicated thermal efficiency of over 70 per cent of the air cycle is in fact realized, a remarkable achievement, showing that there is very little scope left for improvement in indicated thermal efficiency, except in the direction of using higher compression ratios, or of working with a still weaker mixture. In the case of smaller engines the direct heat losses bulk larger because of the greater surface/volume ratio, but smaller cylinders can employ a higher ratio of compression and so recover by more prolonged expansion much that they have lost. Thus over a very wide range the indicated thermal efficiency is independent of cylinder size, but not necessarily so the brake efficiency, for, given generally similar design, the smaller the engine, the higher the relative internal friction.

The Compression-ignition Cycle

Let us consider next the case of the compression-ignition engine. This operates on a heat cycle which varies with the load, ranging from something approaching the constant pressure cycle at full load to something much more nearly approaching the constant volume cycle at very light loads.

In the case of the true constant pressure cycle, heat is added by the combustion of the fuel at a rate just sufficient to maintain a constant pressure during the early portion of the outward stroke, and thereafter the expansion takes place adiabatically until the end of the stroke when the remaining heat is rejected at constant volume. In the case of this heat cycle, the air-cycle efficiency varies, depending upon the duration of the period during which constant pressure is maintained, that is to say, upon the amount of fuel admitted.

To cut a long story short, the air-cycle efficiency of the constant pressure cycle is substantially the same as that of the constant volume if we take as our starting point for expansion not the inner dead centre but rather the point at which the supply of heat is cut off and adiabatic expansion commences.

Since, in practice, the compression-ignition engine operates, at will or at whim, over nearly the whole field between the two heat cycles, it is not profitable to devote much time or space to considering just exactly what would be its indicated thermal efficiency if it were operated at any one intermediate point between the two, nor, in any given case, can one determine exactly at what point in the stroke expansion commences, for though there may be a sharply defined point at which the supply of fuel is cut off, no such sharp definition applies to the point where combustion ends and expansion commences, for they overlap widely.

Comparison of Spark-ignition and Compression-ignition Cycles

The really important differences between the spark-ignition and the compression-ignition cycles are:

(1) In the spark-ignition cycle fuel is present in the cylinder throughout the whole, or in any case the latter part, of the compression stroke. This limits the ratio of compression and therefore of expansion to that which the particular fuel can sustain without detonation or pre-ignition. In the compression-ignition cycle since air only is present in the cylinder during compression no such limit applies and a far higher ratio can be employed and is indeed imposed upon it by the conditions governing combustion.

(2) In the spark-ignition engine we can reduce the fuel/air ratio to only about 85 per cent of the chemically correct value and so cannot reap the advantages of a lower cycle temperature. On the other hand, we can, if we want, operate with a very over-rich mixture and there are occasions, as in aircraft engines, when this is a very valuable asset.

(3) In the compression-ignition engine we can reduce the mean mixture strength right down to zero fuel and so gain the full advantage of a lower cycle temperature, but we cannot enrich it beyond about 85 per cent of the chemically correct value. Thus in terms of mixture range, the spark-ignition engine begins where the compression-ignition engine leaves off.

(4) In the spark-ignition engine we control the power output by varying the quantity of both fuel and air admitted to the cylinder while keeping the air/fuel ratio constant, i.e. by throttling. In the compression-ignition engine control of power output is effected by varying the quantity of fuel only, leaving the air supply constant.

Mechanical Efficiency

Thus far we have considered efficiency in terms of the proportion of the total heat converted into useful work on the piston crown, but this is by no means the whole story; what we are really interested in is the proportion available as useful work at the business end of the crankshaft, and it will avail us nothing if we consume by internal friction or by air pumping what we gain by some improvement in the indicated thermal efficiency.

Taken by and large the internal mechanical friction of an engine is a function of the maximum pressure, for this, to a large extent, determines both the area of the rubbing surfaces and the weight of the moving parts; it determines also the friction of the piston rings, or at least of the top piston ring, against the cylinder walls, for to function at all it is essential that this ring shall have the full gas pressure behind it.

Thus, other things being equal, the lower the ratio of maximum to mean effective pressure, the higher will be the mechanical efficiency of the engine. Since, however, a large proportion of the losses incurred is due to the viscosity of the oil film and another substantial part to the air pumping work in emptying and filling the cylinder, both of which are independent of the working pressure, it follows also that the higher the mean effective pressure the higher the mechanical efficiency.

From the point of view of mechanical efficiency we need, then, the highest possible mean effective pressure combined with the lowest possible ratio of maximum to mean. It is unfortunate that those expedients, to which we could resort to improve the indicated thermal efficiency, such as either the use of a very high ratio of compression, or a prolongation of the expansion stroke, both tend to increase greatly the ratio of maximum to mean pressure and a substantial proportion of our gains would be lost in friction between the piston head and the crankshaft.

Again, as we increase the revolution speed, so we gain in indicated efficiency from the reduction of heat losses, but as we increase the speed, so we increase the friction resulting from the dynamic forces set up by the inertia of the piston, etc. Dynamic forces increase as the square of the revolution speed as also does the viscous drag of the lubricant, and we reach a point at which the losses they entail exceed any gain in indicated efficiency due to higher revolution speeds, and thereafter the debit account rises steeply.

We frequently hear claims that with spark-ignition engines remarkable efficiencies have been obtained by the employment of very high ratios of compression rendered possible by the use of specially prepared fuels, and this of course is possible if we are prepared to sacrifice some of the margin of safety which experience has shown to be

desirable. But had the scantlings of the working parts and the areas of the bearings been increased to meet the higher gas pressures involved and so restore the same margin of safety and the same durability, the results would have been very different. In racing-car engines and, to a lesser extent, in aero-engines one is justified in pruning down the margin of safety and so realizing a higher mechanical efficiency, but, in general commercial use, where a long working life is expected, it seldom pays, in spark-ignition engines, even when the fuel will permit, to employ a ratio of compression higher than about 8·0 : 1, for the simple reason that the increased mechanical losses swallow up nearly the whole of the potential gain.

In the case of high-speed compression-ignition engines it is safe to say that the ratio of compression, which we are compelled by the needs of combustion to employ, is always above rather than below the optimum.

The foregoing are, of course, generalizations and, like all generalizations, are subject to numerous qualifications, some of which will be dealt with in later chapters.

CHAPTER IV

Latent Heat

The latent heat of evaporation of the fuel is an important factor in relation to both spark-ignition and C.I. engines. In the case of the spark-ignition engine, this factor, coupled with the mean volatility, determines the density of the charge taken into the cylinder. It is, of course, clear that the weight of charge retained in the cylinder will be inversely proportional to its absolute temperature at the moment when the inlet valve closes. There is evidence from experimental results that, under steady running conditions, hydrocarbon fuels boiling below about 180° C. are completely evaporated before the commencement of the compression stroke, if not externally to the cylinder, at any rate by contact with the hot walls and by admixture with the highly heated residual exhaust products, excepting only under certain transient conditions when some of the fuel may enter the cylinder in coarse drops or gulps of liquid and so not only escape evaporation but even, to a large extent, combustion also.

The absolute temperature at the commencement of the compression stroke is dependent upon (*a*) the amount of external heating applied and (*b*) the latent heat of evaporation of the liquid fuel. It is dependent also, of course, upon the quantity and temperature of the residual exhaust products and upon the amount of heat picked up from the inlet valve, etc., during entry to the cylinder.

As between the available volatile liquid fuels, and apart from the alcohol group, the variation in latent heat is not very large. It is interesting to note, however, that in cases where the total internal energy is lower, the latent heat is generally slightly higher; consequently a slightly greater weight of charge is taken into the cylinder, sufficient in most cases to compensate for the lower internal energy, and thus bring the actual power output to substantially the same in all cases.

The energy liberated by the combustion of a cubic inch (at standard temperature and pressure) of, for example, a benzene-air mixture is appreciably lower than that of the hydrocarbons forming the greater proportion of petrols. On the other hand, the latent heat of benzene is greater, and, as a result, the power output obtainable from benzene under similar conditions is the same as that from petrol to within less than one-half of one per cent.

Table I gives the latent heat of evaporation of a number of hydro-

carbons and other substances. The air-to-fuel ratio by weight, and also the drop in temperature of the mixture due to evaporation of the liquid, are shown for each fuel. The calculations for all cases are made for mixtures giving complete combustion.

TABLE I

Fuel	Latent heat of evaporation (B.Th.U. per lb.)	Air-to-fuel ratio (by weight) for just complete combustion	Fall in temperature of mixture due to latent heat of evaporation (°F.)
Paraffin series			
Hexane	156	15·2	37·8
Heptane	133	15·1	32·4
Octane	128	15·05	29·0
Nonane	—	15·0	—
Decane	108	15·0	20·1
Aromatic series			
Benzene	172	13·2	46·8
Toluene	151	13·4	40·5
Xylene	145	13·6	38·7
Naphthene series			
Cyclohexane ..	156	14·7	38·7
Hexahydrotoluene	138	14·7	34·2
Hexahydroxylene	133	14·7	32·4
Olefine series			
Heptylene ..	166 (app.)	14·7	41·4
Decylene ..	—	14·7	—
Alcohol group			
Ethyl alcohol ..	397	8·95	148·8
Methyl alcohol ..	512	6·44	252·0
Miscellaneous			
Ether	158	11·14	49·5
Carbon disulphide	153	9·35	55·8
Acetylene ..	Gas	13·2	—
Carbon monoxide	Gas	2·45	—
Hydrogen ..	Gas	34·3	—

The last column is calculated on the assumption that the specific heat of the fuel is constant for all at 0·5

In the case of alcohol, owing to the very much higher latent heat and to the fact that the proportion of fuel to air is also much greater, the latent heat of evaporation plays a supremely important part, and results in a really marked increase in power as compared with other

fuels, although the total internal energy of unit mass of mixture is lower than that of either petrol or benzol. Moreover, there is introduced a feature which is not observed to so marked an extent with other fuels—namely, that the power output with atmospheric induction increases very considerably when a very over-rich mixture is used, because more fuel is then evaporated, the temperature of the charge is lowered and the gain in weight of charge considerably more than outweighs the loss due to the greater specific heat of the products of combustion and to the greater displacement of oxygen by fuel vapour.

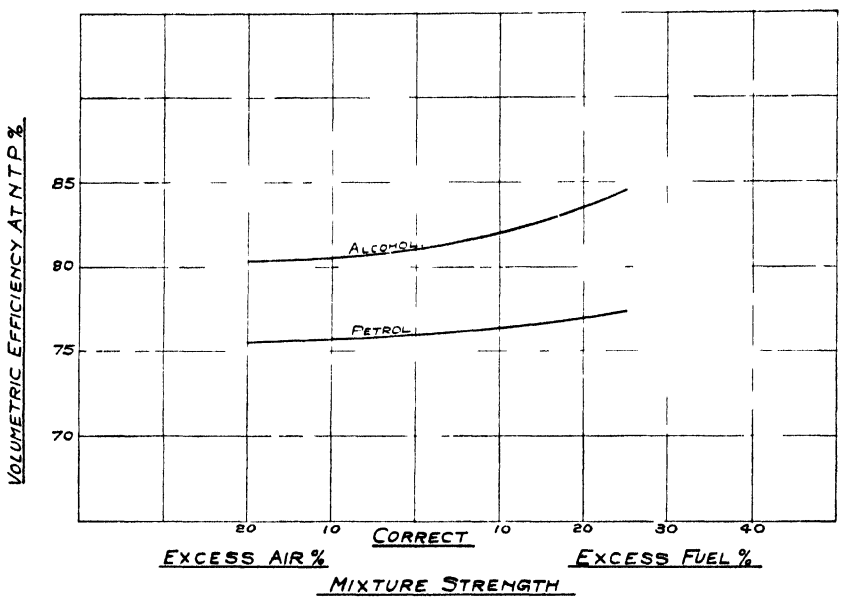

Fig 4 1 —Observed volumetric efficiency with petrol and alcohol at different mixture strengths

The above remarks apply to normally aspirated engines. In the case of supercharged engines, the use of an over-rich mixture allows of a large increase in power output, but, in this case, the excess fuel serves to inhibit detonation and so permits of a greater weight of charge being delivered to the cylinder by the supercharger—quite a different story.

In fig. 4.1 is shown the actual measured volumetric efficiency at N.T.P. when using petrol and ethyl alcohol under precisely similar conditions as to temperature, heat input, etc., and at a compression ratio of 5 : 1. In both cases a careful series of measurements were made at mixture strengths ranging from 20 per cent weak to 25 per cent rich.

Similarly figs. 4.2 and 4.3 show both the indicated mean effective pressure and thermal efficiency obtained when running on petrol and alcohol.

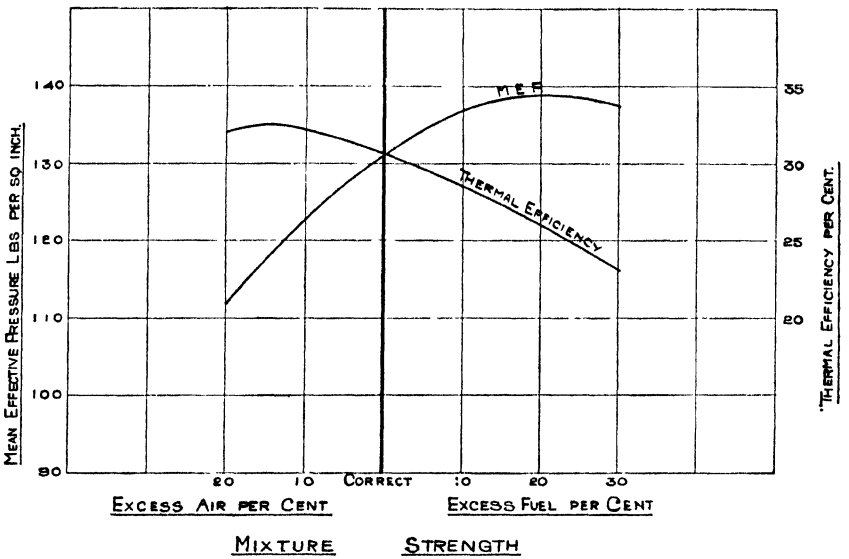

Fig. 4.2.—Indicated mean pressure and thermal efficiency at different mixture strengths with ignition timing adjusted for each change in mixture strength

Fuel: Petrol

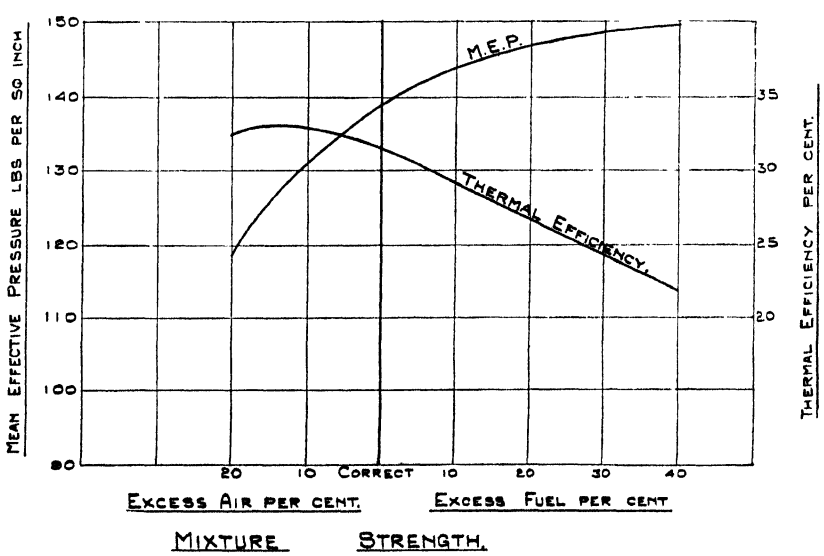

Fig. 4.3.—Indicated mean pressure and thermal efficiency at different mixture strengths with ignition timing adjusted for each change in mixture strength

Fuel: Alcohol

We can, of course, increase the effective latent heat of a fuel by the addition of water either in solution with the fuel or injected separately. In the case of alcohol a certain proportion of water, ranging from 3 per cent to as much as 10 per cent, is generally present in solution in the fuel, but in the case of petrol or benzol some mutual solvent such as acetone must be employed.

In the case of fuels whose volatility is very low, such as kerosene, butyl alcohol, etc., the same advantage cannot be taken of the latent heat of evaporation, because it then becomes necessary to add an excessive amount of heat before entry to the cylinder in order to prevent condensation in the induction system and on the cylinder walls. For this reason alone the power output obtainable from kerosene is actually some 15 per cent lower than from petrol or other volatile hydrocarbons at the same compression ratio.

Volatility

The volatility of a fuel is of importance for spark-ignition engines, both from the point of view of ease of starting and because it determines the amount of pre-heating required to give reasonably uniform distribution. The amount of pre-heating governs, in its turn, the use which may be made of the latent heat of the liquid fuel.

All the above considerations apply to spark-ignition engines only. In the case of compression-ignition engines when air only is inhaled into the cylinder, the latent heat of evaporation of the fuel has, of course, no influence whatever on the volumetric efficiency.

Volatility does, however, play an important, but entirely different, role, for the greater the volatility the more quickly will each individual droplet of fuel be surrounded by its envelope of vapour, and the shorter will be the delay period.

Calorific Value

The heat liberated by the combination of the fuel and air is usually determined by burning the fuel in a bomb calorimeter. The heat value so found includes the latent heat of the water formed, because in this form of calorimeter the temperature falls below the boiling-point of water. Since, however, it is quite out of the question, in any internal-combustion engine, to make use of the latent heat of the water formed as a product of combustion, it is customary to deduct from the total heat liberated that due to the condensation of the water. The heat value found, after this deduction has been made, is termed the *lower calorific value* of the fuel and is generally accepted as the basis upon which to calculate the thermal efficiency of an engine. As applied to spark-ignition engines using volatile liquid fuels, such a value for the available heat is not quite correct because, when a fuel is burnt in a bomb or other calorimeter, some of the heat of combustion is devoted

to evaporating the liquid fuel and is therefore not recorded. Now when used in a spark-ignition engine, the whole of the liquid is evaporated before combustion takes place, and the heat required for its evaporation is supplied by the waste heat from previous cycles, or by the available heat already present in the air. In either event, it is supplied by heat other than the useful heat of combustion of the fuel. If, therefore, it be accepted as correct that the latent heat of evaporation of the water formed should be deducted from the total heat of combustion as determined by calorimetric measurement, because this heat cannot be utilized, then it is equally right and proper that the latent heat of evaporation of the liquid fuel itself should be added to the observed calorimetric determination, because its equivalent value in heat of combustion can be and is used in any internal-combustion engine in which the fuel is evaporated completely before combustion starts (see Table II, p. 68).

In the case of the compression-ignition engine this does not apply, for by far the bulk of the heat required for the evaporation of the fuel is supplied by the heat of combustion. When, therefore, comparing the thermal efficiencies of the two types of engine, it must be borne in mind that the effective calorific value of the fuel, in the case of the compression-ignition, is less than in the spark-ignition engine by an amount nearly equal to the latent heat of evaporation of the liquid. So far as hydrocarbon fuels are concerned, the difference is not large, being of the order of 0·6 to 1·0 per cent only, but in the case of the alcohol group, it may be as high as 5 per cent, or even higher when, as is usually the case, some water is present in solution in the fuel.

To sum up then, in the case of the spark-ignition engine, a high latent heat of evaporation of the liquid fuel is very advantageous in that, by lowering the suction temperature, it increases the volumetric efficiency and therefore the power output of the engine without absorbing any of the available heat of combustion. In the case, however, of the compression-ignition engine a high latent heat is in every way detrimental, for it can have no influence on the volumetric efficiency, and since nearly the whole of this heat must be supplied by and therefore deducted from the heat of combustion, both the power and efficiency of the engine are reduced. For this, and other reasons also, it would be absurd to attempt to use such a fuel as alcohol in a compression-ignition engine.

It cannot be too strongly emphasized that the calorific value of a liquid fuel bears little or no relation to the power output obtainable from that fuel. It is merely a measure of the quantity of fuel required; the lower the heat value of the fuel, the greater the quantity needed to do the same work.

The power output of an engine is determined by the amount of oxygen it can combine, and is influenced by the calorific value of the

TABLE II

Fuel	Calorific (lower) value (exclusive of latent heat)		Calorific (lower) value (including latent heat at constant volume)		Latent heat of evaporation of fuel (at constant pressure, atmospheric) B.Th.U. per lb.
	B.Th.U. per lb.	B.Th.U. per gallon	B.Th.U. per lb.	B.Th.U. per gallon	
Typical petrols "A" .	19,080	137,000	19,200	136,200	133·0
"B" ..	18,450	144,300	18,580	145,200	142·0
"C" ..	18,890	136,600	19,020	137,500	140·0
"D" ..	19,000	138,100	19,120	137,000	135·0
"E" ..	18,770	142,600	18,890	143,500	132·0
"F" ..	18,970	136,400	19,090	137,100	132·0
"G" ..	19,130	134,700	19,250	135,500	134·0
"H" ..	18,790	144,100	18,920	145,000	145·0
Heavy Fuels					
Heavy aromatics ..	17,900 (app.)	158,500 (app.)	18,030	159,600	136·0
Kerosene	19,000 (app.)	154,400 (app.)	19,100	155,200	108·0
Paraffin series					
Pentane (normal) ..	19,600	122,300	19,740	123,100	154·0
Hexane (80% pure) .	19,250	131,900	19,390	132,900	156·0
Heptane (97% pure)	19,300	132,800	19,420	134,100	133·0
Aromatic series					
Benzene (pure)	17,302	152,950	17,460	154,200	172·0
Toluene (99% pure) ..	17,522	152,500	17,660	153,600	151·0
Xylene (91% pure) ..	17,800	153,500	17,930	154,500	145·0
Naphthene series					
Cyclohexane (93% pure)	18,800	147,800	18,940	149,000	156·0
Hexahydrotoluene (80%)	18,760	146,200	18,890	147,200	138·0
Hexahydroxylene (60%)	18,770 (app.)	139,700 (app.)	18,890	140,600	133·0
Olefines					
Cracked spirit (53% unsaturated)	18,400 (app.)	139,400 (app.)	18,540	140,200	150·0 (app.)
Alcohol group, etc.					
Ethyl alcohol (98%) ..	11,480	91,600	11,840	94,500	406·0
Ethyl alcohol (95 vol.%)	10,790	88,000	11,130	92,000	442·0
Methyl alcohol (wood naphtha)	9,630	79,900	10,030	83,300	500·0 (app.)
Methylated spirits ..	10,200	83,700	10,580	86,900	450·0 (app.)
Butyl alcohol (commercial)	—	—	—	—	—
Ether (50% in petrol) ..	16,700 (app.)	121,300 (app.)	16,830	122,500	146·0 (app.)
Carbon disulphide (50%)	10,600	105,400	10,730	106,600	146·0

fuel only to the extent that fuels of low calorific value, by their greater bulk, displace a slightly larger proportion of air, and therefore of oxygen. Among the volatile liquid fuels of the hydrocarbon series, the bulk of the fuel vapour is so small, in any case, as to have very little influence.

It is only in the case of gaseous fuels and, more especially, of those containing inert diluents such as nitrogen or carbon dioxide, that the power output of an engine is affected appreciably by the calorific value of the fuel due to the displacement of a substantial proportion of the oxygen when the volume of gas is large or swollen by the addition of diluents.

In the case of compression-ignition engines in which the fuel does not enter the cylinder until after the whole of the air is entrapped, neither can the latent heat of the fuel have any influence on the volumetric efficiency, nor can any air be displaced by the larger bulk of a fuel or gas of lower calorific value. In short, the calorific value of the fuel has but a secondary effect on the performance of a spark-ignition engine, and none at all on that of a C.I. engine.

Heat Value of Mixture

It is upon the heat value of the mixture of fuel and air, in the proportion required to give complete combustion, that the power output of an engine depends, and, in this connection, we find that all hydrocarbon fuels give, within very close limits, the same heat value per standard cubic inch of chemically correct mixture. When allowance is made for the increase or decrease in specific volume after combustion, the variation becomes even less. Table III (p. 70) gives:

Col. (1) The calorific value of various petrols and other fuels, including the latent heat of evaporation.

Col. (2) The ratio of air/fuel by weight for complete combustion.

Col. (3) The increase or decrease in specific volume after combustion.

Col. (4) The energy in ft.-lb. liberated by the combustion of one standard cubic inch of mixture giving complete combustion, i.e. the total available internal energy.

The heat value of the " correct " mixture is usually termed the total " internal energy " of the working fluid, and this term will in future be used in order to distinguish it from the calorific value of the fuel. It will be noted how little the value differs throughout the whole range of fuels listed.

TABLE III

Fuel	(1) Calorific (lower) value (including latent heat at constant volume)		(2) Air-to-fuel ratio by weight for complete combustion	(3) Spec. volume after combustion ÷ that before combustion; or "volume ratio"	(4) Total energy liberated by combustion per cu. in. at N.T.P. of mixture giving complete combustion (ft.-lb.)
	B.Th.U. per lb.	B.Th.U. per gal.			
Typical Petrols "A"	19,200	136,200	15·05	1·053	48·5
"B"	18,580	145,200	14·3	1·038	48·15
"C"	19,020	137,500	14·7	1·049	48·45
"D"	19,120	137,000	14·8	1·052	48·53
"E"	18,890	143,500	14·6	1·047	48·35
"F"	19,090	137,100	14·9	1·051	48·51
"G"	19,250	135,500	15·0	1·053	48·54
"H"	18,920	145,000	14·7	1·048	48·31
Heavy fuels					
Heavy aromatics ..	18,030	159,600	13·8	1·04	48·52
Kerosene	19,100	155,200	15·0	1·06	48·91
Paraffin series					
Pentane (normal) ..	19,740	123,100	15·25	1·051	48·7
Hexane (80% pure) ..	19,390	132,900	15·2	1·051	48·35
Heptane (97% pure) ..	19,420	134,100	15·1	1·056	48·64
Aromatic series					
Benzene (pure)	17,460	154,200	13·2	1·013	47·51
Toluene (99% pure) ..	17,660	153,600	13·4	1·023	47·98
Xylene (91% pure) ..	17,930	154,500	13·6	1·03	48·1
Naphthene series					
Cyclohexane (93% pure)	18,940	149,000	14·7	1·044	49·11
Hexahydrotoluene (80%)	18,890	147,200	14·7	1·047	48·2
Hexahydroxylene (60%)	18,890	146,600	14·8	1·054	48·59
Olefines					
Cracked spirit (53% unsaturated)	18,540	140,200	14·8 (app.)	1·054	49·54
Alcohol group, etc.					
Ethyl alcohol (98·5%)	11,840	94,500	8·9	1·065	47·39
Ethyl alcohol (95 vol. %)	11,130	92,000	8·4	1·065	46·86
Methyl alcohol (wood naphtha)	10,030	83,300	6·5	1·06 (app.)	48·2 (app.)
Methylated spirits ..	10,580	86,900	8·0 (app.)	1·064	48·82
Butyl alcohol (commercial)	—	—	—	—	—
Ether (50% in petrol) ..	16,830	122,500	13·0	1·06	49·2
Carbon disulphide (50%)	10,730	106,600	10·8	0·98	39·4

Thermal Efficiency obtainable from Different Fuels

Provided that the fuel is reasonably volatile the thermal efficiency obtainable at any given compression ratio is substantially the same for all hydrocarbon fuels irrespective of their chemical composition or of any other factor. In the case of the alcohol group, however, a somewhat higher thermal efficiency is obtained because, owing in part to their higher latent heat, and in part to their lower internal energy and flame temperature, both the mean and the maximum temperatures of the cycle are lower, and the losses are therefore somewhat less. The range of burning on the weak side which, by controlling the flame temperature, would control also the efficiency, happens to be almost exactly the same in the case of all the practicable liquid fuels yet examined with the exception of ether, and, in all cases, the maximum thermal efficiency is obtained when the mixture is about 15 per cent weak.

CHAPTER V

Distribution of Heat

It is usual to express the distribution of heat in an internal-combustion engine in terms of the proportion converted into indicated horse-power, the proportion yielded up to the cylinder walls, and, lastly, that rejected to the exhaust, the latter item being the residue after deducting from the total heat of the fuel the two former categories; it generally includes also the losses by radiation. This form of subdivision is perfectly legitimate so long as it is clearly understood that it is no more than a convenient form in which both to measure and to express the heat distribution.

The proportion of the total heat of the fuel converted into effective indicated horse-power can be determined readily enough and quite reasonably accurately from the known heat supplied, the known brake horse-power developed, and the, at least approximately known, internal frictional and other losses.

The heat yielded up to the cylinder walls and carried away by the cooling water can also be determined fairly accurately; it must be understood, however, that it includes:

(1) The heat given up by radiation, conduction, convection, etc., during the period of combustion.

(2) The heat given up during the expansion period.

(3) The heat given up during the exhaust stroke.

(4) The heat generated by the friction of the piston and piston-rings.

On the other hand, it does not usually include either the heat carried away by the lubricating oil or that lost by radiation and convection from the external walls of the cylinder, pipe-work, etc., nor, of course, does it include a small amount of heat picked up by the air during its entry to the cylinder.

It is almost impossible to distinguish that proportion of the heat carried away by the lubricating oil (which would otherwise have passed into the cylinder jackets) from that which has been generated by friction in the bearings, etc.

It is possible, however, to evaluate fairly accurately the heat lost by radiation and convection from the external walls, and this may

reach quite a formidable proportion if the tests are carried out in a strong draught, or at very high temperatures of the cooling medium.

It is necessary to examine each of these sources separately and further to examine them separately again in their relation to spark-ignition and compression-ignition engines respectively.

Heat Losses in the Spark-ignition Engine

Let us consider first the case of the spark-ignition engine.

(1) *Heat lost during Combustion.* The period of combustion as distinct from expansion is relatively a short one, but it is one during which the ruling temperature and density in the combustion chamber are very high indeed, i.e. between 2300° C. and 2500° C. in the case of most volatile liquid fuels, such as petrol, benzol, etc. Also it is a period during which the gases within the combustion chamber are in a state of violent commotion so that heat is transferred very readily by convection, etc.

Now if, by any means, the loss of heat to the cylinder walls during this period could be suppressed, such heat would be converted into indicated horse-power at an efficiency corresponding to the efficiency of expansion alone (i.e. exclusive of the negative work done during compression) which in an engine with a compression ratio of 5 : 1 is roughly about 40 per cent. The remaining 60 per cent of the heat so recovered would, in any event, be rejected to the exhaust after expansion.

(2) *Heat lost during Expansion.* Loss of heat during the expansion stroke may or may not be serious, depending upon the stage in the expansion stroke at which it is lost. Loss of heat at the very commencement of the expansion stroke is almost equally as serious as that lost during the combustion period because, had its loss been suppressed, it could have been utilized at an efficiency corresponding to nearly the full ratio of expansion, whereas heat lost during the latter part of the expansion stroke is of very little moment, for even had its loss been suppressed it could have done but little useful work during the remainder of the stroke, and nearly the whole of it would have been rejected to the exhaust in any case.

At first sight it would appear that owing to the higher temperatures and pressures ruling at the beginning of the expansion stroke, the loss of heat will be much greater during the earlier period, but against this it must be remembered that, as the expansion proceeds and the piston descends, an increasing area of relatively cold cylinder barrel is exposed. Also, owing to dissociation and subsequent recombination, the fall in temperature during the expansion stroke is nothing like so great as it might appear; the final temperature with a compression ratio of 5 : 1 being still over 1700° C.

From the above considerations it will be seen that, though it is customary to yoke together the heat lost during combustion and

expansion as though its influence during each period were the same, it is most certainly inaccurate and misleading so to do. Of the average heat loss during expansion, probably only about 20 per cent could have been converted into useful work and the remaining 80 per cent would have been rejected to the exhaust.

(3) *Heat lost during the Exhaust Stroke.* Although during the exhaust stroke the temperature of the gases is much lower, yet heat is given up to the cooling water with greater rapidity during this period, for in addition to the normal heat flow to the cylinder walls, the hot gases are issuing at an exceedingly high velocity past the exhaust valve and through a short length of exhaust pipe, including generally a right-angled bend, which is always embodied in the cylinder jacket and cooled by the circulating water; consequently, of the total heat carried away by the cooling water, at least one-half and often more than half is given up during the exhaust period.

Now the whole of the heat taken up during the exhaust stroke, by far the bulk of that taken up during expansion, and about 60 per cent of that taken up during combustion could not possibly have been converted into useful work and should have been debited to the exhaust loss account.

(4) *Heat generated by Piston Friction.* This item, though a substantial one, is hard to evaluate because of the difficulty of separating the heat generated by friction from that which has entered the piston from the combustion gases and so been transferred to the cylinder walls. It will vary, too, and that to a large extent, depending on the design of the piston, the number of piston-rings, the viscosity of the lubricant and other factors. Nor does all the heat which enters the piston from either source necessarily find its way into the cylinder walls, for a substantial proportion will be carried away by the circulation both of oil and of air within the crankcase of the engine.

Separate tests carried out by motoring engines, under conditions approximating as nearly as possible to the running conditions, show that the heat generated by piston friction usually ranges between 1 per cent and 1·5 per cent of the total heat of the fuel; most of this frictional heat will find its way through to the cylinder walls.

It is interesting to take a specific example and to trace out as accurately as possible the true gain in efficiency which would be effected if all heat losses to the cylinder walls were completely suppressed. Let us take, as a fair average example, the case of a well-designed and efficient spark-ignition engine with a compression ratio of 5 : 1 in which it has been found that:

32 per cent of the total heat of the fuel is converted into useful work on the piston,
28 per cent of the total heat of the fuel is carried away by the cooling water,
40 per cent of the total heat of the fuel remains and is accounted as lost to exhaust, radiation, etc.

Of the 28 per cent carried away by the cooling water, approximately 6 per cent will be lost to the walls of the cylinder during the combustion period, about 7 per cent will be yielded up during expansion, and the remaining 15 per cent during the exhaust stroke. Of the 6 per cent lost during the combustion period, roughly about 40 per cent, or 2·4 per cent of the total heat of the fuel, could have been converted into useful work. Of the 7 per cent lost during expansion, somewhere about 20 per cent, or 1·4 per cent of the total heat of the fuel, could have been utilized. Of the 15 per cent lost during the exhaust stroke, no part could have been utilized. We conclude then that although 28 per cent of the total heat of the fuel has been carried away by the cooling water, only 3·8 per cent could have been converted directly into useful work on the piston, and the efficiency of the engine would be increased from 32 per cent to 35·8 per cent only, a gain of barely 12 per cent. Nor is this all, for had all the heat to the cylinder walls been suppressed, the temperature of the working fluid would necessarily have been correspondingly higher, with the result that the losses due to the increase both of specific heat and of dissociation at the higher temperatures would be increased substantially and the net gain would be very small, probably only from 32 per cent to about 34·5 per cent, or a net gain of only about 7·5 per cent.

These figures show clearly how relatively small a part the loss of heat to the cylinder walls plays in the functioning of an internal-combustion engine and how misleading it may be to assess that loss of heat by computation of the total amount of heat carried away by the cooling water. As a first approximation it is fairly correct to assume that of all the heat carried away by the cooling water of a cylinder, only about 10 per cent could actually have been converted directly into useful work.

Heat Losses in the Compression-ignition Engine

In the case of the compression-ignition engine the distribution of heat differs very considerably. Although the total amount of heat carried away by the cooling medium is considerably less than in the spark-ignition engine, the proportion of this heat which could otherwise have been converted into useful work is much greater. This difference is due to a number of factors. In the first place, owing both to the longer expansion ratio and to the lower mean flame temperature, the temperature of the exhaust is much lower, hence the transfer of heat during the exhaust stroke to the walls of the cylinder and to that part of the exhaust passage which is contained in the cylinder head is very much lower.

In the case of the spark-ignition engine this purely waste heat represents at least 50 per cent of the total heat carried away by the cooling medium. In that of the compression-ignition engine it probably

represents little more than 25 per cent depending, in this case, largely upon the air/fuel ratio.

On the other hand, the heat lost during the actual combustion process is relatively much greater because:

(1) The density of the gases is nearly three times as great, hence the rate of heat transmission is much greater.

(2) The actual localized flame temperature as distinct from the mean gas temperature is higher due to the higher ratio of compression.

(3) In order to ensure complete combustion of the fuel, the air must be in a state of even more rapid movement, hence the transference of heat by convection is greater.

Owing both to the lower mean temperature and the more prolonged expansion, the loss of heat during the expansion stroke is somewhat less, but a greater proportion of it occurs during the early portion of the stroke, that is to say, at a stage where more of it could still have been converted into useful work.

Thus we conclude that, although in a compression-ignition engine, the total amount of heat carried away by the cooling medium is less than in a corresponding spark-ignition engine, yet the proportion of that heat which could otherwise have been converted into useful work is considerably greater.

By comparison let us take the case of a well-designed high-speed compression-ignition engine having a compression ratio of 15 : 1 in which:

45 per cent of the heat of the fuel is converted into useful work on the piston,
25 per cent is carried away by the cooling water, and
30 per cent by exhaust, radiation, etc.

Of the 25 per cent carried away by the cooling water about 2 per cent will be due to piston friction, for piston friction bulks larger in the C.I. engine. This then leaves 23 per cent to be accounted for. Of this about 8 per cent will be lost during the combustion period, about 6 per cent during expansion and about 9 per cent during the exhaust. Of the 8 per cent lost during the combustion period at full load, about 55 per cent, or say 4·4 per cent of the total heat of the fuel, could otherwise have been converted into useful work on the piston. Of the 6 per cent lost during expansion somewhere about 33 per cent could have been utilized, or 2·0 per cent of the total heat of the fuel. Of the 9 per cent lost during exhaust, none, of course, could have been utilized. We find, therefore, in this case that, of the 25 per cent of the total heat carried away by the cooling water, about 6·4 per cent could have been converted into useful work on the piston, and the efficiency of the

engine would be increased from 45 to 51·4 per cent, or rather less when such factors as change of specific heat, etc., are taken into account.

The above figures, in the case of the compression-ignition engine, are based on the assumption that the engine is operating with about 30 per cent excess air which is a normal full-load condition for a C.I. engine. At reduced loads when the excess air is much greater, the flow of heat to the cooling medium will be less, but the distribution of that heat throughout the cycle will change but little excepting that piston friction will bulk larger, since in a C.I. engine this is a nearly constant quantity independent of load.

The above comparison will obtain when both engines are operating at full load, the compression-ignition engine with a 30 per cent excess of air and the spark-ignition with the chemically correct mixture. It will be obvious, of course, that the effect of any excess of fuel over and above the chemically correct mixture, though it will alter the apparent heat balance sheet, as a paper transaction, will have no more than a very secondary effect on either the total heat flow to the cooling medium or to the distribution of that heat; in fact, it will tend to reduce the total heat flow because of the general, though slight, lowering of temperature due to the latent heat of the excess fuel.

From the above considerations it will be apparent that although the total heat flow to the cooling medium is greater in the spark-ignition engine, yet the loss of otherwise useful heat is considerably less than in the compression-ignition engine.

Reduced Load Conditions

So far, however, we have considered only the conditions which obtain at full load. At reduced loads the picture changes considerably. In the case of the spark-ignition engine the air/fuel ratio and therefore the temperature cycle remains nearly constant throughout the load range, whereas in the C.I. engine the weight of air remains constant and the fuel/air ratio varies, and with it the whole cycle temperature. In the former case it is the pressure scale which varies while the temperature scale remains substantially unchanged; in the latter it is the temperature scale which varies while the pressure scale is but little affected.

Let us assume that, in both cases, the load be reduced to, say, one-third; in the case of the spark-ignition engine by reducing the weight of charge (air and fuel) to one-third, and in that of the C.I. engine by reducing the fuel alone. For the moment, let us neglect all secondary considerations. We have, then, in the one case one-third the weight of charge but at the same temperatures as on full load; in the other case the same weight of charge but at only one-third the temperature. Obviously, therefore, the flow of heat to the cooling medium will be very much greater in the former case. This, of course,

is gross over-simplification, for it neglects the effect of density on heat transfer, and that of change of specific heat and dissociation on temperature as well as other secondary factors, such as increased dilution with residual exhaust products and so on, but even when all these are taken into account, their combined effect is to modify but not to change the picture, and we find that at one-third load the relative heat flow to the cooling medium is approximately 60 per cent greater than that at full load in the case of the spark-ignition engine, and approximately the same in that of the compression-ignition engine.

In all the above considerations, the distribution of heat has been expressed in terms of percentage of the total heat of the fuel. This is the customary practice, and, for the purpose of the preceding arguments, the most convenient one, but it must be borne in mind that it is applicable only when the proportion of fuel is equal to or less than that required for chemically complete combustion.

For practical purposes it is generally more convenient, and in some respects more realistic, to express it in terms of the brake horse-power of the engine, for this gives us the quantity we want to arrive at when designing a radiator or cooling system.

Scale Effect

All the preceding figures are based on observations from engines whose individual cylinder capacity ranged from 1 to 3 litres, that is to say, from the field covered by aero-engines, engines of heavy commercial vehicles and for most military purposes. Between these limits of size the relative distribution of heat varies very little, but as we go down the scale of size it becomes more marked on account of the increasing surface/volume ratio and of the shallower depth of the combustion space. Thus not only will the total relative quantity of heat carried away by the cooling medium be increased, but the proportion of the heat given up during the combustion period will be relatively somewhat greater. This, of course, applies alike to both spark- and compression-ignition engines, but since the latter are more vulnerable to heat loss they will tend to suffer more from scale effect. On the other side of the picture, the smaller the cylinder the faster will it normally run, and therefore the less time will there be for loss of heat per cycle, but most of the heat is probably transferred by convection and since the degree of turbulence or air-swirl is nearly proportional to the rotational speed, the relative heat distribution changes comparatively little with change of speed. Much depends, of course, upon the general design of the engine and the form of the combustion chamber in particular, but tests on a considerable number of small petrol engines show that, on the average, the relative heat flow to the cooling medium varies by less than 10 per cent over the speed range

1500–3000 r.p.m. On balance, therefore, the smaller the cylinder, the greater the loss to the cylinder walls of potentially useful heat.

The following data are arrived at from several hundred heat-balance sheets on a large number of four-cycle spark-ignition engines of many different types and of cylinder sizes ranging between 1 and 3 litres. To reduce the results to a useful common denominator it is best to take a given cylinder and to consider how the total heat flow to the walls of that cylinder will be affected by such changes as varying the mixture strength, the throttle opening, supercharging, ignition timing, etc., and, where possible, to express such variations in terms of percentage, taking as unity the heat flow from that cylinder when operating with wide-open throttle at atmospheric intake pressure, at the chemically correct mixture strength, and with optimum ignition advance. The chemically correct mixture strength is taken as unity because, in all cases, and on all fuels tested, the gross heat flow to the jackets is at a maximum at this mixture ratio.

Again, since the mechanical efficiency of the various engines tested varied widely, the power output is expressed in terms of indicated performance and, here again, the indicated mean pressure, obtained when the engine was operating under the conditions described above, has been taken as unity.

It must be emphasized at the outset that in the determination of heat flow much, a great deal in fact, depends upon the conditions of test. All the figures quoted hereafter were arrived at under the same conventional conditions, i.e. the tests were carried out in still air and with no allowance either for conduction of heat from the cylinder to the crankcase, though care was always taken to keep the mean temperature of the cooling medium as nearly as possible the same as that of the crankcase. Again, no allowance was made for the heat carried away by the lubricating oil, some proportion of which is acting as an effective cylinder coolant. On the other side of the picture, no allowance was made for the heat added by piston friction. All these are variables depending upon the design, the size, and other characteristics of each individual engine.

Variation of Heat Flow and Mixture Strength

Analysis of a large number of heat-balance tests taken over a wide range of mixture strengths on various spark-ignition single-cylinder research engines shows a very fair measure of agreement as between engines of widely different types and speeds and over a wide range of fuels, i.e. paraffins, aromatics, and alcohols.

In all cases the heat flow to the cylinder walls reaches its maximum intensity when the mixture is chemically correct, and, in all cases, when using a hydrocarbon fuel, the chemically correct mixture corres-

ponds to a drop in I.M.E.P. of 4 per cent below the maximum obtainable. On either side of the chemically correct mixture the intensity of heat flow diminishes. On the weak side it diminishes nearly as a direct function of the fuel consumption. On the rich side the rate of diminution is governed largely by the physical properties of the fuel and, more especially, by its latent heat of evaporation (see Table I).

TABLE I

Mixture strength	I.M.E.P. (per cent)	Gross heat flow to cylinder jacket (per cent)
50 per cent excess fuel	103	82·5
40 ,, ,, ,, ,,	103·5	86
30 ,, ,, ,, ,,	104	89·8
20 ,, ,, ,, ,,	104	93·7
10 ,, ,, ,, ,,	102·5	97·5
Correct	100	100
5 per cent excess air	97·5	99
10 ,, ,, ,, ,,	94·5	97·5
15 ,, ,, ,, ,,	91·5	94·0
20 ,, ,, ,, ,,	87·5	89·5

Conditions

(1) Constant induction air temperature.
(2) Constant r.p.m.
(3) Ignition timing adjusted to give maximum torque at each mixture strength.
(4) All measurements taken under conditions which were free from detonation.

Some doubt exists as to the last figures, with 20 per cent excess air, because with a normally carburetted charge, a mixture containing 20 per cent excess air requires excessive spark advance and is rather too weak for steady running. It is difficult, therefore, to maintain sufficiently stable conditions for reliable heat balance tests under these conditions.

Variation of Gross and Relative Heat Flows when Throttling or Boosting

Table II opposite represents mean figures from a large number of tests on both poppet- and sleeve-valve cylinders, but the very high boost figures, i.e. the last four, are restricted to sleeve-valve engines only.

It should be borne in mind that all figures for heat flow to the cylinder jackets include piston friction, an item which bulks large at small throttle openings.

TABLE II

I.M.E.P. (per cent)	Gross heat flow to cylinder jackets (per cent)	Heat flow relative to I.H.P.
Throttling		
40	61	152·0
50	66	132·0
60	71·5	118·5
80	84·5	105·5
100	100	100
Boosting		
100	100	100
150	140	93·5
200	176	88·0
250	212	85·0
300	250	83·5
350	285	81·5
400	322	80·2

Effect of Varying the Induction Temperature

With constant induction pressure, variation in the temperature has only a negligible effect on the flow of heat to the cooling medium. The increase in the mean cycle temperature is compensated for by the reduction in density of the charge, with the net result that, as the induction temperature is raised, so the I.M.E.P. falls, while the gross heat flow remains substantially constant.

The same does not apply, however, to the case of the compression-ignition engine, where pre-heating of the air results in a large increase in the heat flow to the cylinder walls, and a marked deterioration in the thermal efficiency.

Effect of Varying Compression Ratio

Reliable comparative tests can be made only on a variable-compression engine in which the ratio of compression can be varied while running under otherwise constant conditions. The unit from which the following data were obtained is a four-valve overhead-valve engine, similar in general characteristics to, and of virtually the same cylinder capacity as, the Rolls-Royce "Merlin". A large number of heat-balance tests have been carried out on this unit at various speeds and on many different fuels.

Since the following figures (Table III) were all obtained from one and the same unit the actual observed figures are quoted:

TABLE III

Compression ratio	I.M.E.P. (lb./sq. in.)	Gross heat flow (B.Th.U. per hour)	Heat flow relative to I.M.E.P.
5·0 : 1	150·0	65,600	100
6·0 : 1	162·0	62,000	87·5
7·0 : 1	170·5	56,700	76·5
7·5 : 1	174·0	53,000	70·0

It will be seen that the gross heat flow, as measured when the engine was running with a chemically correct mixture strength, i.e. at the mixture strength giving maximum intensity of heat flow, falls rapidly as the compression is raised. It must be remembered, however, that this is a poppet-valve engine with two exhaust valves and, as such, embodies two right-angled exhaust passages in the cylinder head; it will, therefore, be more sensitive than a sleeve-valve engine to changes in exhaust temperature. Such evidence as there is of the variation of heat flow with compression ratio in sleeve-valve cylinders with short straight exhaust passages shows the same trend, but less marked, as indeed would be expected.

Lastly a set of tests were run on hydrogen (Table IV). On this fuel alone is it possible, in a spark-ignition engine, to reduce the power output over a wide range by controlling the supply of fuel alone, i.e. by qualitative control as in a C.I. engine.

TABLE IV

Fuel, hydrogen gas.
Compression ratio, 5·45 : 1.
R.P.M., 1500.
Mixture strength at maximum load, 10 per cent weak.

Percentage of maximum M.E.P.	100	80	60	40
Heat to I.H.P. (per cent)	33·3	35·6	38·2	40·0
Heat to cooling water (per cent) ..	23·6	24·9	25·3	28·6
Heat to exhaust, radiation, etc. (per cent)	43·1	39·5	36·5	31·4

In these tests it will be observed that:

(1) The thermal efficiency increases progressively as the load is reduced due to the lower mean flame temperature.

(2) The proportion of heat transmitted to the cooling water increases slightly as the load is reduced but at nothing like the rate shown in the previous tables.

The conclusions to be drawn from the preceding observations and tests are:

(1) That the direct loss of heat to the cylinder walls plays only a comparatively small part in the performance of a spark-ignition engine, and that even were the whole of this loss completely suppressed, the gain in power output and efficiency would be equivalent only to the conversion into useful work of an extra 2·5 to 3 per cent of the heat of the fuel.

(2) That, of the total heat carried away by the cooling water, only a small proportion could be converted into useful work, and by far the bulk would appear in the exhaust.

(3) That in the case of the compression-ignition engine direct heat loss, though less in apparent total, plays a more prominent and a more damaging part.

CHAPTER VI

Combustion-chamber Design: Spark Ignition

In the early days of the petrol engine and more especially during the period 1910–30, the side-by-side valve engine was the most favoured type and indeed it had many advantages both from a manufacturing and maintenance point of view. It was easy to enclose and lubricate the valve mechanism, while the detachable head could be removed for decarbonizing without disturbing either the valve gear or the main pipe-work. Also the general layout was neat, clean, and compact.

In its original form, however, it gave a poor performance, for it was both excessively prone to detonation and extremely sensitive to ignition timing and, as such, could not compete in power or fuel economy with contemporary overhead-valve engines, for these could employ safely a higher ratio of compression within the limits set by detonation, and were markedly less sensitive to ignition timing.

As a result of intensive investigations into both the mechanism of detonation and the influence of turbulence carried out just before and during the 1914–18 war, a revised form of combustion chamber was evolved for side-valve engines which came to be known as the turbulent head; this gave them a performance at least equal to that of contemporary overhead-valve engines and so revived their waning popularity.

Prior to the introduction of the turbulent head, the form of combustion chamber in general use for side-valve engines was as shown in fig. 6.1, a typical example of the practice that existed in 1914. In this, the combustion chamber is in the form of a more or less flat slab extending over the piston and the valves and with the sparking-plug usually situated immediately over the inlet valve.

Such a form of chamber suffered from two major defects:

(1) Lack of turbulence due to the fact that the air entering through the inlet valves had to turn two right angles before it entered the cylinder and, in so doing, lost much of its initial velocity.

(2) Owing to the great length of flame travel from an ignition point over the inlet valve to the far side of the piston the tendency to detonate was very much accentuated.

The turbulent head was designed to overcome these defects. In

the first place the main body of the combustion chamber was concentrated over the valves, leaving a slightly restricted passage-way communicating with the cylinder; thus additional turbulence was created during the compression stroke as the gases were forced back again through the passage. By varying the throat area of the passage it was possible to achieve any desired degree of general turbulence

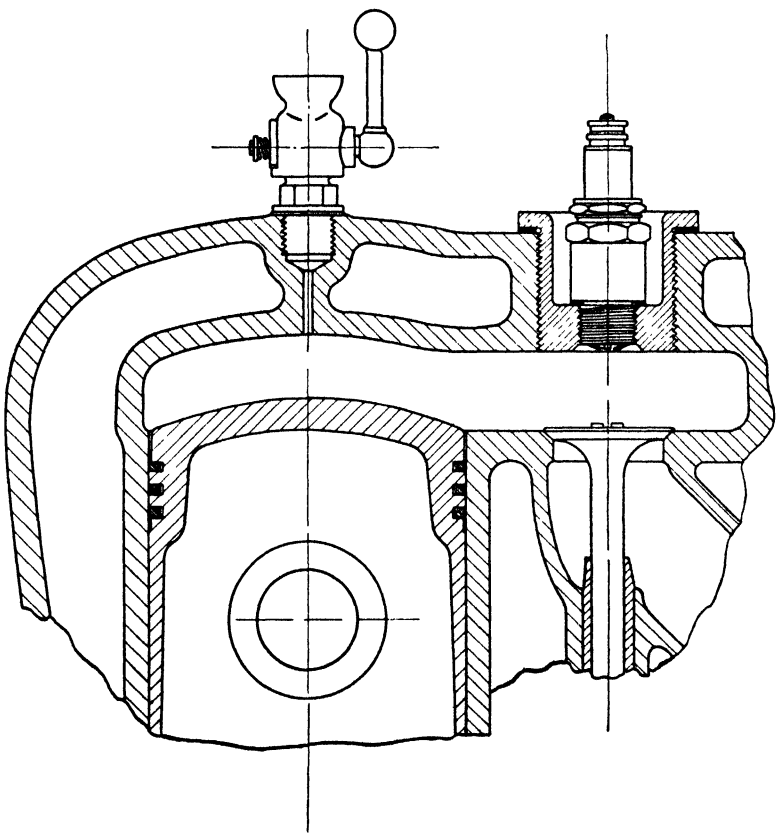

Fig. 6.1.—Typical side-valve combustion chamber (1914)

within the main body of the combustion chamber. This, by speeding-up the second stage of combustion, improved very considerably the performance and, at the same time, and for the same reason, rendered the engine relatively insensitive to the timing of the spark. In fact, the turbulence increased with increase of engine speed at such a rate that a fixed time of ignition could be used on full load, throughout the whole range of engine speed, at the cost of only an insignificant loss of performance at the high-speed end of the range. On reduced loads, of course, some further ignition advance was required and this

could be, and in some cases was, provided by a spring-loaded diaphragm, operated by the depression in the induction pipe, though it was not until many years later that this became accepted practice.

In order to reduce to the minimum the tendency to detonate, the length of effective flame travel was shortened by bringing that portion of the head which lay over the farther side of the piston into as close contact as possible with the piston crown. Thus there was left at top

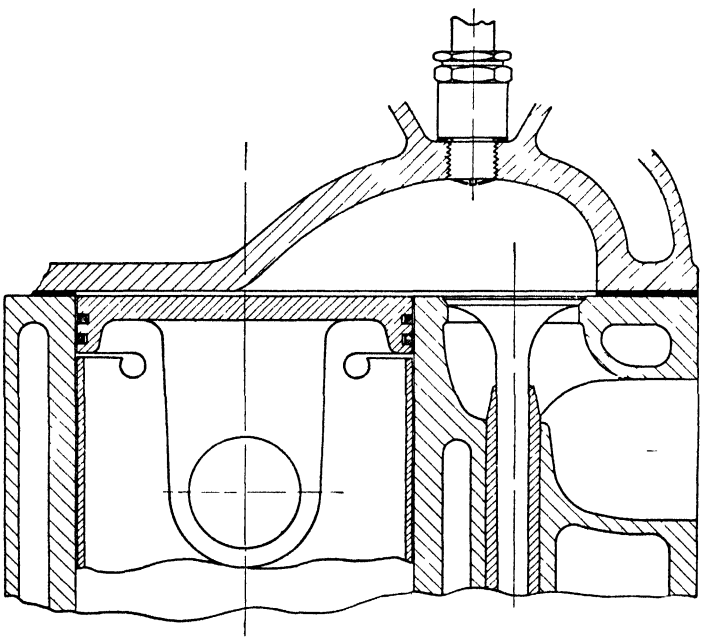

Fig. 6.2.—Typical turbulent-head design (1919)

dead centre only a very thin layer of gas entrapped between the relatively cool piston and the still cooler head. This thin lamina was thus able to get rid of the heat thrust at it by the advancing flame at a rate amply great enough to ensure against its being detonated.

Experiments carried out during the 1914–18 war had revealed that there was a critical depth for this lamina of about 0·1 in. for compression ratios of the order of 5·0 : 1 below which the end gases would be so chilled as to render them immune from detonation.

Lastly, and again with a view to shortening as far as possible the length of flame travel, the sparking-plug was placed nearly in the centre of the effective combustion space, but with a slight bias towards the hot exhaust valve. Fig. 6.2 illustrates a cross-section of the combustion chamber of an experimental engine designed in 1918–19 which developed, for its date, a very outstanding performance in the way of power output and fuel economy.

Equipped with this type of head, the side-valve engine was able to show a performance equal in all respects to the overhead-valve engine of the same date and was eventually adopted almost universally.

At the time that the turbulent head was developed the average octane number of the petrol then available was in the region of 45–50 and the incidence of detonation limited the compression ratio of even quite small engines to about 4·0 : 1; even so they would detonate heavily unless the ignition timing were constantly adjusted. The turbulent head allowed of this ratio being raised to about 4·8 : 1 (depending of course on the size of the engine), thus permitting of a very substantial increase in power output and efficiency. As the average octane number of petrol improved, the compression ratio could be, and was, increased until, by about 1935, it had reached nearly 6·0 : 1. At this ratio the normal spread of burning has so much increased that relatively little turbulence is required to give the optimum rate of pressure rise, viz. about 30–35 lb. per sq. in. per degree of crank angle. The turbulent head then tended to become over-turbulent, and the rate of rise of pressure too rapid, thus leading to harsh running and high heat losses. To combat this the area of the passage-way was increased progressively, but, with the very small total clearance volume available at a compression ratio of 6·0 : 1, this could be done only at the expense of closing down on the area round the valve heads, or by restricting the size or lift of the valves, any one of which expedients involved reducing the breathing capacity of the engine.

Thus a limit was reached from which there would appear to be no escape, unless one was prepared to cut down the speed and therefore the maximum power below that of which the engine was otherwise capable.

With the relatively high-octane petrol available to-day it would seem that the side-valve engine can no longer compete with the overhead or with other forms which permit of the use of a compact combustion space without limiting the size of, or the free passage-way round, the heads of the valves.

From the point of view of turbulence, of detonation and of heat loss, the ideal form of combustion chamber would seem to be a hemisphere with the sparking-plug in the centre of the flat roof similar to that used in some direct-injection compression-ignition engines. This would give an equal and minimum length of flame travel in all directions from the sparking-plug combined with the minimum surface/volume ratio, but unfortunately it is not a very practical arrangement for a spark ignition, and therefore a relatively low compression engine because:

(1) The hemispherical cavity in the piston would have to be so large even for a ratio of 7 : 1 that it would be well nigh impossible to keep the piston cool or to protect the piston-rings from the direct heat flow.

(2) It would add greatly to the weight of the piston.

(3) With the sparking-plug in the centre and the valve heads contained within the contour of the cylinder bore, it would not be possible to provide either adequate valve area or adequate cooling round the sparking-plug.

At the high ratios of compression in use to-day, viz. 6·0 : 1 and over, the normal turbulence created by the entry of the gases through the inlet valves is usually sufficient, or nearly sufficient, to give the rate of burning and therefore of pressure rise we are seeking, while a small addition to the general turbulence can always be obtained by providing what is now generally termed " squish ", namely, the rapid ejection of gas trapped between the piston and some flat or corresponding surface in the cylinder head.

In the design of a combustion chamber of high compression to suit the fuels available to-day or in the future, our aims should be:

(1) On the score of volumetric efficiency, to accommodate the largest possible inlet valve or valves, with ample clearance round the valve heads.

(2) On the score of detonation, to keep the length of flame travel from the sparking-plug to the farthest point in the combustion space as short as possible.

(3) Because of the hot surface it presents, to keep the exhaust valve small, but to compensate for this by employing a relatively high lift.

(4) To ensure that both the exhaust-valve seat and the sparking-plug boss are well cooled by a stream of water directed round them at high velocity.

(5) In order to be able to extend the mixture range as far as possible on the weak side and more especially on reduced loads, it is essential that the sparking-plug or plugs shall be so positioned that they will be well scoured of any residual exhaust products by the incoming charge.

(6) If any additional turbulence is required, this may be supplied by the provision of an appropriate area of " squish ".

It is not easy, of course, to cater for all these requirements, some of which are conflicting, and, at the same time, to maintain a mechanically convenient valve-actuating mechanism. Moreover, on manufacturing grounds, it is desirable, wherever possible, to employ a plain flat-topped piston.

The simplest and perhaps the most mechanically convenient compromise is what may be termed the bath-tub form of combustion chamber. This consists of an oval-shaped chamber with both valves mounted vertically overhead and with the sparking-plug at the side, as shown in fig. 6.3. The flanks of the oval overhang the cylinder bore and afford areas which may be used for " squish ".

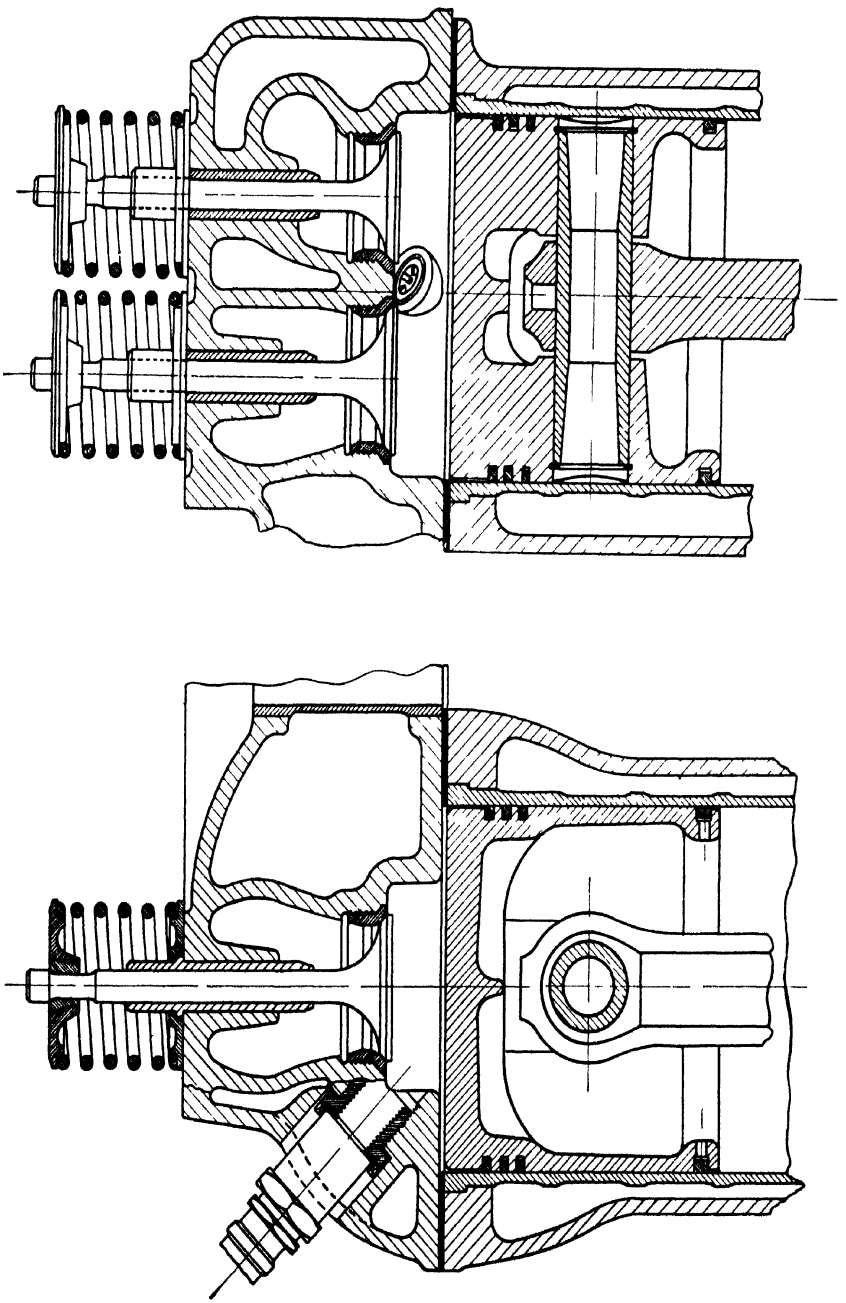

Fig. 63.—Typical bath tub head

For those applications which call for a good all-round but not an outstanding performance, this form provides at least a very fair compromise, and goes far to meet most of the conditions set forth above, while retaining the advantage of mechanical simplicity.

In common with all forms of combustion chamber which involve placing the valves in a single row along the cylinder block, it is open to the objection that either the breathing capacity must be somewhat limited or that the overall length of the engine must be determined by the size and spacing of the valves, rather than by the cooling of the cylinder barrels or the crankshaft bearings. When, however, the crankshaft is mounted in bearings between every alternate crank-throw, as in a three-bearing four-cylinder or four-bearing six-cylinder engine, advantage can be taken of the wider spacing between alternate cylinders to allow the combustion chamber to overflow the cylinder bore to some extent. Thus it is possible, without lengthening the engine on behalf of the valves alone, to provide adequate breathing capacity for the attainment of maximum power, without supercharge, at a piston speed of approximately 3000 ft. per minute and this, for most applications, is generally sufficient. This is a much higher piston speed than could be realized by a compression-ignition engine with two valves only. Three main reasons account for the difference. In the C.I. engine:

(1) It is desirable to work with at least 20 per cent excess air at normal full power; hence a correspondingly greater valve area is needed.

(2) It is very undesirable to let the valve heads overlap the cylinder bore; hence the permissible diameter of the valves is less.

(3) In order to ensure ignition under all operating conditions, the C.I. engine cannot afford to work with an under-filled cylinder.

For these reasons, and others of a secondary nature, the corresponding limit for a two-valve C.I. engine is about 2000 ft. per minute.

As to the other conditions, the flame travel is comparatively short; hence it is reasonably good from the point of view of detonation.

The exhaust-valve seating is in a position where it can be efficiently cooled, but the sparking-plug boss is not so favourably situated.

The sparking-plug is in a position where it will be well scoured of any residual exhaust products by the incoming charge.

When it is desired to attain maximum power at piston speeds appreciably in excess of 3000 ft. per minute, it becomes necessary to depart from the single row of valves, though this, of necessity, involves some added complication of the valve gear. If the valves are placed athwartships then either one or more overhead camshafts must be

used, or we must be content to put up with a rather complicated arrangement of push-rods and rockers, or, alternatively, we may place one valve in the cylinder block operated directly from a camshaft below and the other overhead and operated by means of push-rod and rocker. The design shown in fig. 6.4—that of the modern Rover engine —embodies a form of combustion chamber which would appear to approach as near to the ideal as any yet developed, though at the cost

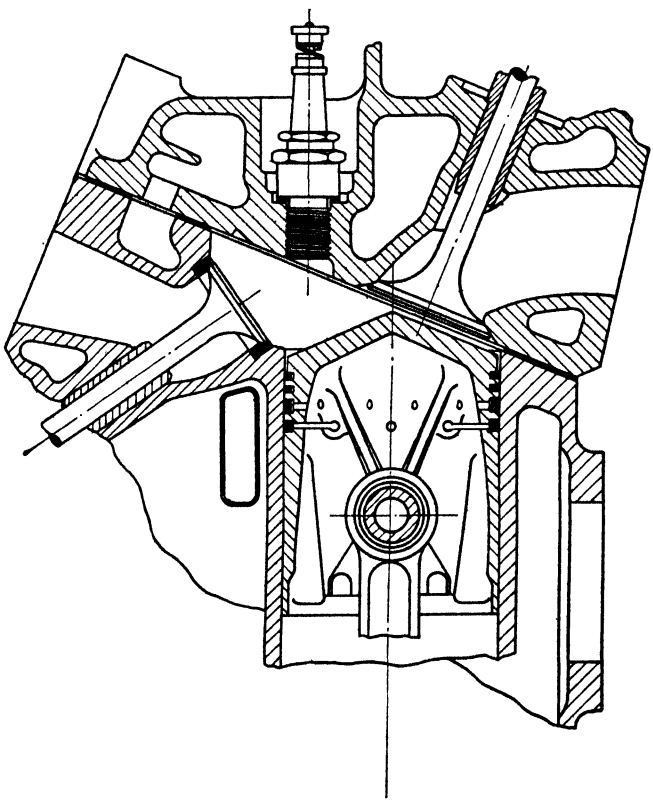

Fig. 6.4.—Rover cylinder head

of considerable complexity in the valve mechanism, and of a shaped piston crown. In this design the main body of the combustion chamber is extremely compact and approaches very nearly the form mentioned previously, namely, a hemisphere with the sparking-plug in the centre of the flat roof.

It will be seen that this shape of chamber appears to conform to all the rules. The effective flame travel is about the shortest possible. The end gas is reduced to a thin layer bounded by the relatively cool piston and inlet valve, and so should be immune from detonation.

Both the exhaust valve and sparking-plug are so situated that they can be well cooled and the latter scoured of any residual exhaust products by the mixture entering through the inlet valve.

In the sleeve-valve engine, with no valves in the cylinder head, we have complete freedom of manœuvre. The sparking-plug can, of course, be placed in the exact centre of the combustion chamber, we have no hot surfaces to worry about, and by bringing the flat-topped piston nearly into contact with the cylinder head, we can, if we wish, reduce the effective length of flame travel to something even less than the radius of the cylinder. Hence the tendency to detonate is reduced to the absolute minimum, and we can, in fact, operate on the same fuel at about one whole ratio higher compression than on an overhead poppet-valve engine of equal cylinder dimensions. On the other side of the picture we have to face certain difficulties:

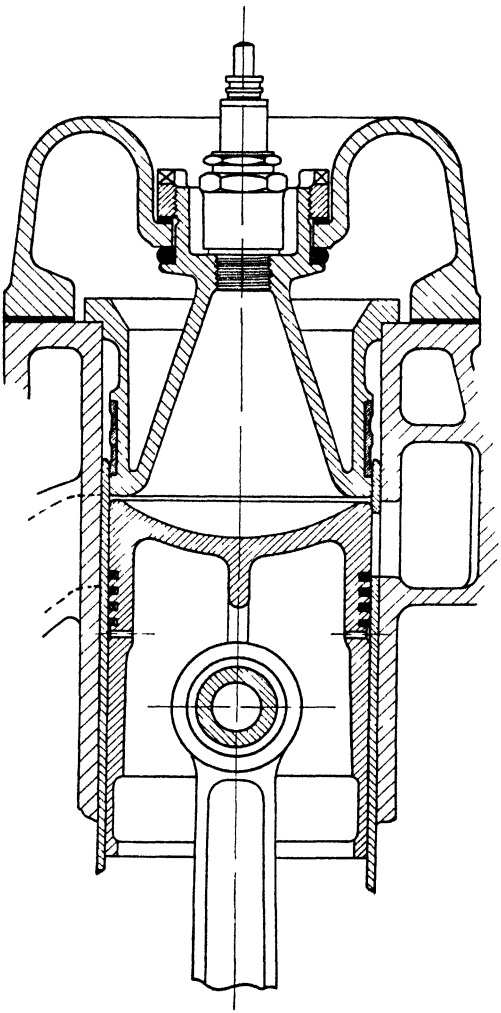

Fig. 6 5.—Sleeve-valve combustion chamber as developed for very smooth running

(1) Owing to the very free and unrestricted entry of the air through the sleeve ports the normal turbulence is excessive, resulting in a very rapid rate of pressure rise, with its accompaniment of rough running and high heat losses.

(2) Owing to the motion of the single sleeve-valve, the incoming air enters the cylinder tangentially and thus sets up a rotary swirl of the whole body of the air, which persists throughout the whole cycle. Such a rotary swirl can be turned to great advantage in a compression-ignition engine, but in

a spark-ignition it is wholly objectionable, for it serves merely to increase the heat losses.

(3) The position of the sparking-plug, though ideal from most points of view, is not such that it can be very effectively scavenged by the entering air.

In endeavours to overcome these objections a great number of different shapes of cylinder head were tested during the course of the research and development work described in Chapter XVII. Briefly it was found:

(1) That though the degree of turbulence could not be reduced, the rate of pressure rise resulting therefrom could be reduced and controlled by restricting the area of the advancing flame front; that is to say, by employing a combustion chamber of conical form with the sparking-plug at the apex, and so provide a very smooth-running engine, see fig. 6.5. This, however, had the ill effect that the length of flame travel was increased and therefore the tendency to detonate, and that the plug points were further removed from the entering air and hence were less well scavenged. The combined effect of these two factors was to reduce the power output by about 3 or 4 per cent and to increase the consumption by a rather larger amount because the poorer scavenging of the sparking-plug forbade the use of very weak mixtures.

(2) It was found that the air-swirl could be eliminated entirely by the provision of very small anti-swirl baffles at the entry to one or more of the inlet ports. This, however, if carried too far, tended to convert air-swirl into turbulence which was already excessive. A satisfactory compromise between air-swirl and turbulence was, however, arrived at eventually.

In the case of the aircraft engine, where the utmost power and efficiency were the primary considerations, the best all-round results were obtained with a plain flat combustion chamber; with this the performance was in almost all respects equal to or better than that obtainable with any arrangement of poppet valves, but the running of the engine was somewhat rough and noisy. With the steeply conical form of chamber on the other hand, the running was quite remarkably smooth and quiet and, though at some sacrifice in performance, this form would no doubt be preferred for, say, a pleasure-car engine.

CHAPTER VII

Combustion-chamber Design: Compression Ignition

For the rapid and complete combustion of the fuel in a compression-ignition engine we need a high relative velocity between the fuel droplets and the air.

Let us suppose that we are using a single-orifice injector (and there are very cogent practical arguments in favour of this), then, ideally, we should like so to adjust our air movement at the maximum delivery of the fuel pump that the whole of the air in the combustion space is swept once past the fuel jet during the process of combustion, that is to say, it must make one complete revolution during this short period. This, however, will involve a very high rate of air-swirl. If, now, we use two jets of fuel 180° apart, then clearly the air need make only half a revolution during the combustion process; if four jets, only one-quarter of a revolution, and so on.

We can set up the necessary air-swirl either:

(1) by directing the flow of the air during its entry to the cylinder,
(2) by forcing the air through a tangential passage into a separate swirl chamber during the compression stroke,
(3) by making use of the initial pressure rise due to partial combustion to create swirl or turbulence.

Induction Swirl

In the case of either the four-cycle sleeve-valve or of the two-cycle engine, in which the air enters the cylinder through ports round the circumference, it is possible, by suitable formation of the inlet ports, to create all the induction swirl we require, even for use with a single-orifice injector, and that without impairing appreciably the volumetric efficiency. We can then combine a single-orifice injector with an open combustion chamber as in fig. 7.1, which illustrates the combustion chamber of a sleeve-valve engine, or fig. 7.2, that of a two-cycle engine with inlet ports and a poppet exhaust valve. In the case of the two-cycle engine, however, we cannot afford to create too much induction air-swirl or we shall interfere seriously with the scavenging process, for with a very high air-swirl the entering air

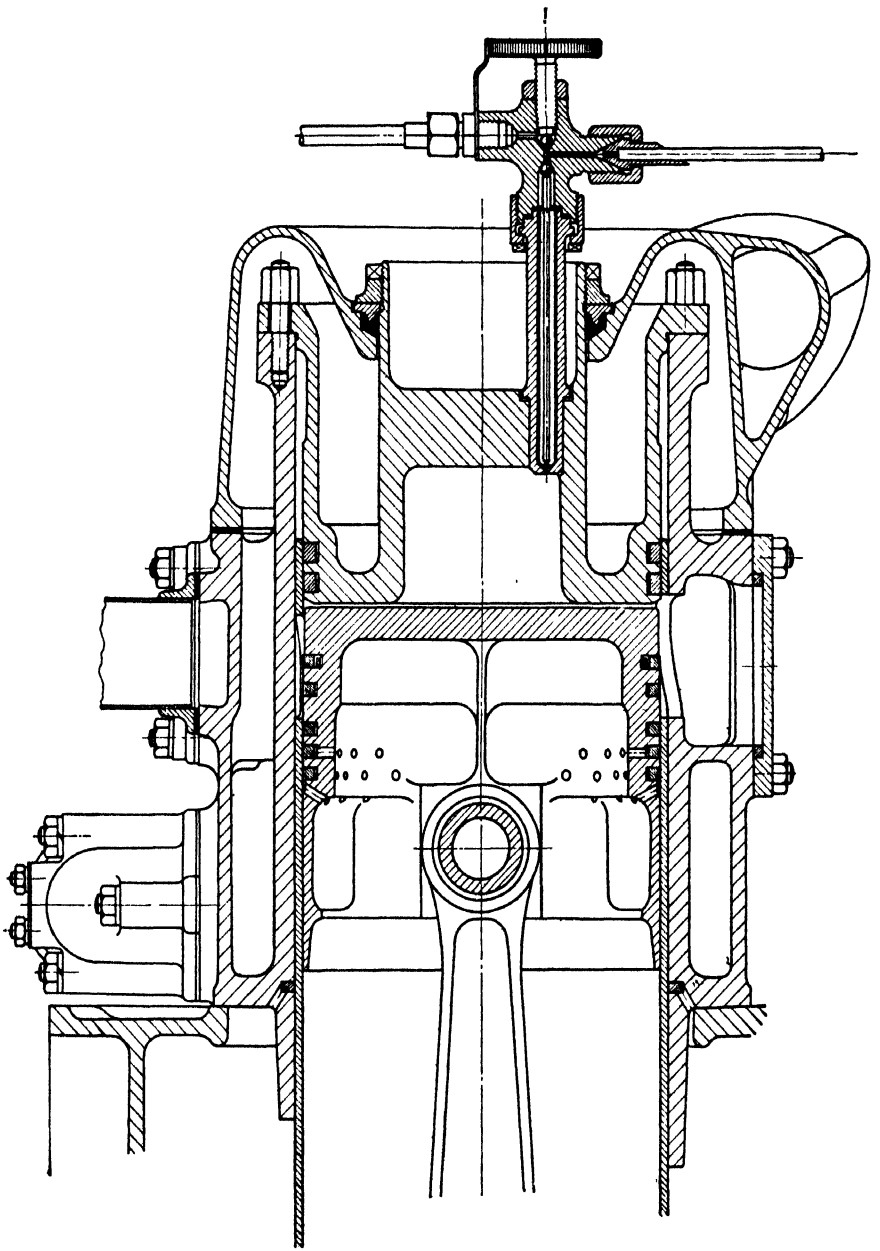

Fig. 7.1.—Combustion chamber of sleeve-valve C.I. engine

will tend to travel in a spiral clinging closely to the walls of the cylinder barrel and leaving, undisturbed, a central core of exhaust products.

In this connection some experiments carried out in the author's laboratory during an early stage in the research on high-speed C.I. engines are of interest as illustrating the influence of air-swirl.

For these experiments a single-cylinder sleeve-valve engine having a bore of 5·5 inches and a stroke of 7 inches was used. The intensity of induction swirl was controlled by hinged baffles placed just outside

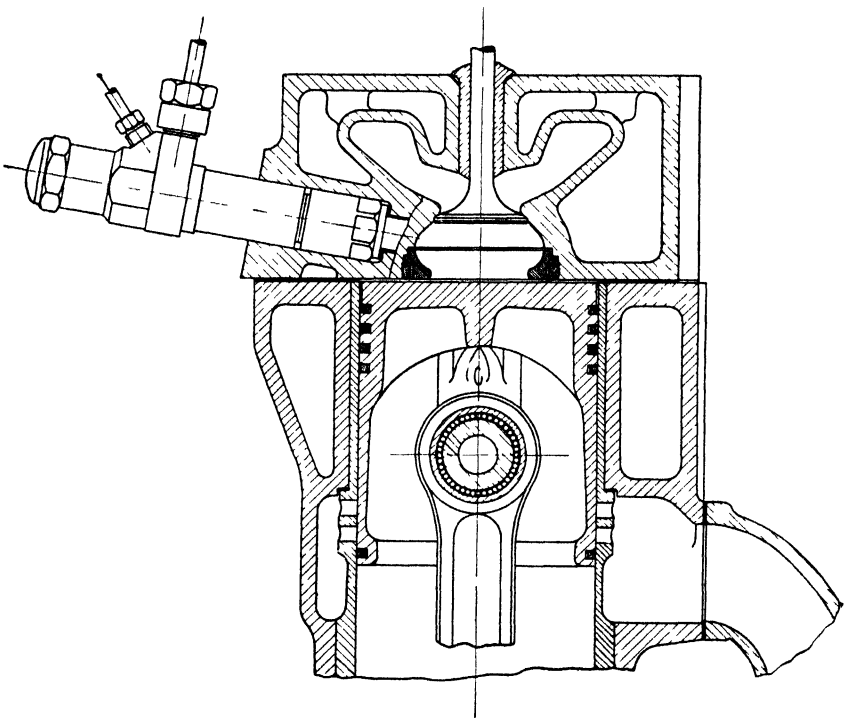

Fig. 7.2.—Combustion chamber of two-cycle C.I. engine

the air inlet ports and was recorded by means of an anemometer with a rotating vane placed inside, and conforming closely with the contour of, the combustion chamber.

By motoring the engine and recording the speed of the anemometer, it was possible to obtain a relation between the crankshaft and anemometer speeds, which relation was expressed as the swirl ratio. Thus if the crankshaft were turning at, say, 1000 r.p.m. and the anemometer at 10,000 r.p.m. the swirl ratio would be 10.

A large number of such readings were taken with the baffles set at various carefully marked angles, and the swirl ratio at each baffle position was recorded over the range from 3·5 to 12·5 : 1. It was found

also that for any given setting of the baffles the swirl ratio remained substantially constant throughout a wide range of speed.

It is not suggested that the anemometer gave a true reading of the absolute rate of air-swirl at the time of fuel injection, for it could record only a mean rate throughout the cycle, though naturally it would be influenced mostly by the movement of the air when the density was highest, i.e. at the end of compression; also, of course, there is some

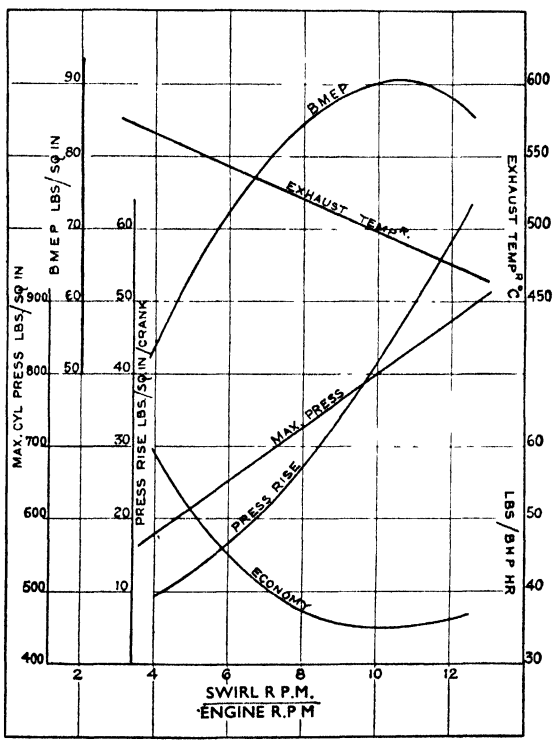

Fig. 7.3.—Effect of air-swirl on performance with a constant fuel delivery of 8 pints per hour

loss both by friction and slip, though this appeared to be small. The anemometer did, however, give a very fair relative measure of the swirl ratio and was quite reliable and consistent. From various indirect evidence it appeared probable that the anemometer readings underestimated the true value of the swirl ratio at the time of fuel injection by from 30 to 50 per cent.

Having thus calibrated the swirl ratio at different settings of the baffles the anemometer was removed, the injector replaced and the performance of the engine investigated when running under its own power.

In this particular engine the combustion space was in the form of a cylindrical chamber whose diameter was 0·475 and height 0·4 of the piston diameter. A single-orifice plain-hole injector was used squirting down one side of the combustion chamber and aimed directly at the piston crown, as shown in fig. 7.1 (p. 95).

The most favourable proportions and dimensions of the combustion chamber and injector position had been arrived at during previous investigations.

A long series of tests were then undertaken in order to find the most favourable relation between air-swirl and rate of fuel injection.

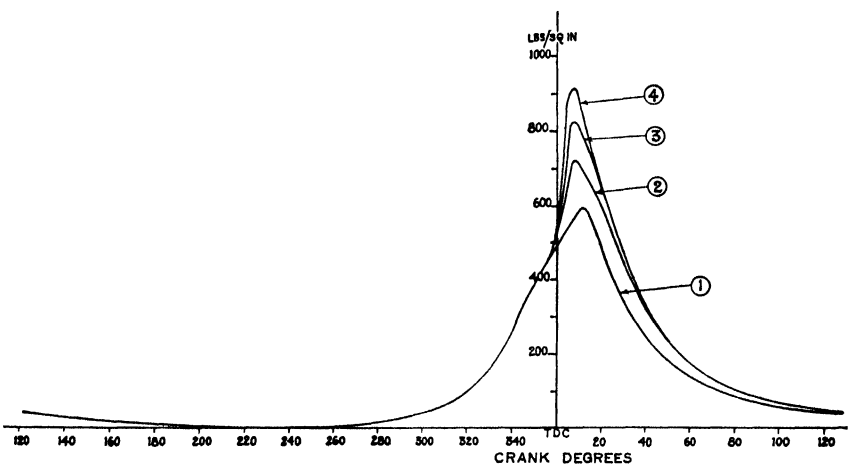

Fig. 7.4.—Indicator diagrams with varying rates of air-swirl, viz:

Air-swirl ratio (1) = 3·9
(2) = 7·65
(3) = 10·65
(4) = 12·5

Constant fuel delivery 8 pints per hour

Fig. 7.3 summarizes the effect of varying the swirl ratio upon B.M.E.P., specific fuel consumption, exhaust temperature, maximum peak pressure and rate of pressure rise with a constant fuel delivery of 8 pints per hour over a range of air-swirl ratio, as recorded by the anemometer, of from 3·9 to 12·5; fig. 7.4 gives four typical indicator diagrams taken during this test.

It will be noted that, under these particular conditions as to rate of fuel injection, timing, etc., the optimum swirl ratio, both from the point of view of maximum power output and minimum specific consumption, appears to be about 10·5.

These results appeared very illuminating in that they emphasized very definitely the great importance of matching the rate of air-swirl with the rate of injection or rather with the rate of burning, which

latter is limited to a fairly narrow range. They showed that at the optimum a very excellent performance could be obtained for a specific fuel consumption of 0·35 lb. per B.H.P. hour at a brake mean pressure of 90 lb. per sq. in., and at a piston speed of 1570 ft. per minute was a remarkably good performance in those days. They showed also how rapidly and how disastrously the performance fell away with any large departure from the optimum condition.

With this combination, however, the running was decidedly rough and both the maximum pressure and rate of pressure rise rather high. As a next step the rate of fuel injection was reduced and the tests repeated, when it was found that optimum conditions were reached with a swirl ratio of 9. The maximum pressure was then reduced by 70 lb. per sq. in. and the rate of pressure rise from 45 to 25 lb. per sq. in. per degree of crank angle with, of course, a very marked improvement in the smoothness and quietness of running, but at a cost of about 3 per cent in both power and fuel economy.

Tests at varying speeds showed that the optimum relation of air-swirl to fuel injection rate remained substantially constant over a wide speed range.

Tests at constant speed but varying load showed, as would of course be expected, that the relation became very critical at the maximum load, 121 lb. per sq. in. B.M.E.P., and progressively less so as the load was reduced.

Tests of heat flow to the cylinder jacket showed that this increased slightly with increase of swirl ratio but since the range of optimum swirl, viz. 9 to 10·5, was small, no appreciable difference would be expected.

Though now somewhat ancient history, the author has recalled these tests because they illustrate so clearly the importance of the relationship between air-swirl and fuel injection.

In the case of a poppet-valve engine with the valves mounted vertically in the cylinder head, we can promote a certain amount of induction air-swirl by careful formation of the air-intake passages and/or by masking a portion of the circumference of the inlet valve (see figs. 7.5 and 7.6); but, do what we will, we cannot possibly promote a sufficient intensity of air-swirl to work with a single-orifice injector without cutting down the volumetric efficiency to an intolerable extent. If, then, we decide to employ induction air-swirl in a poppet-valve four-cycle engine, we shall have to reconcile ourselves to the use of a multiple-orifice injector, and in the interests of symmetry, that injector will have to be placed in, or very near, the centre of the cylinder and therefore between the valves, thus restricting somewhat the diameter of the valves and therefore the breathing capacity.

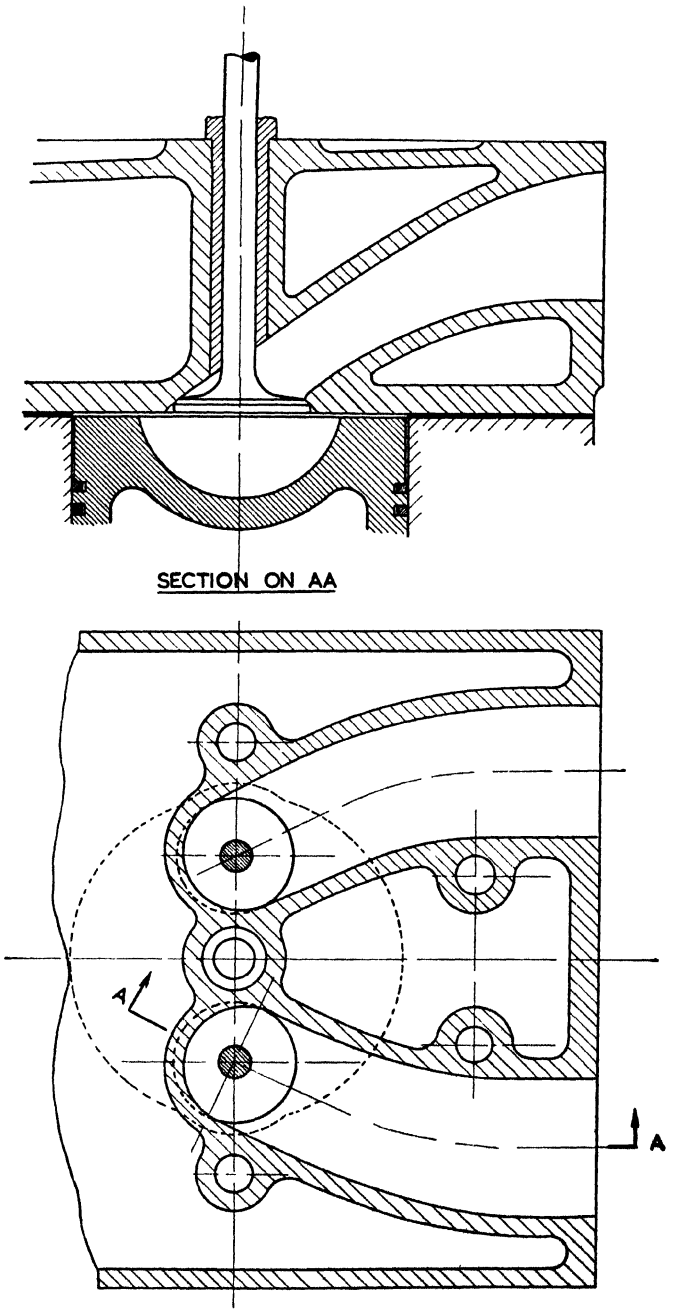

Fig. 7.5.—Inclined inlet port to produce air-swirl

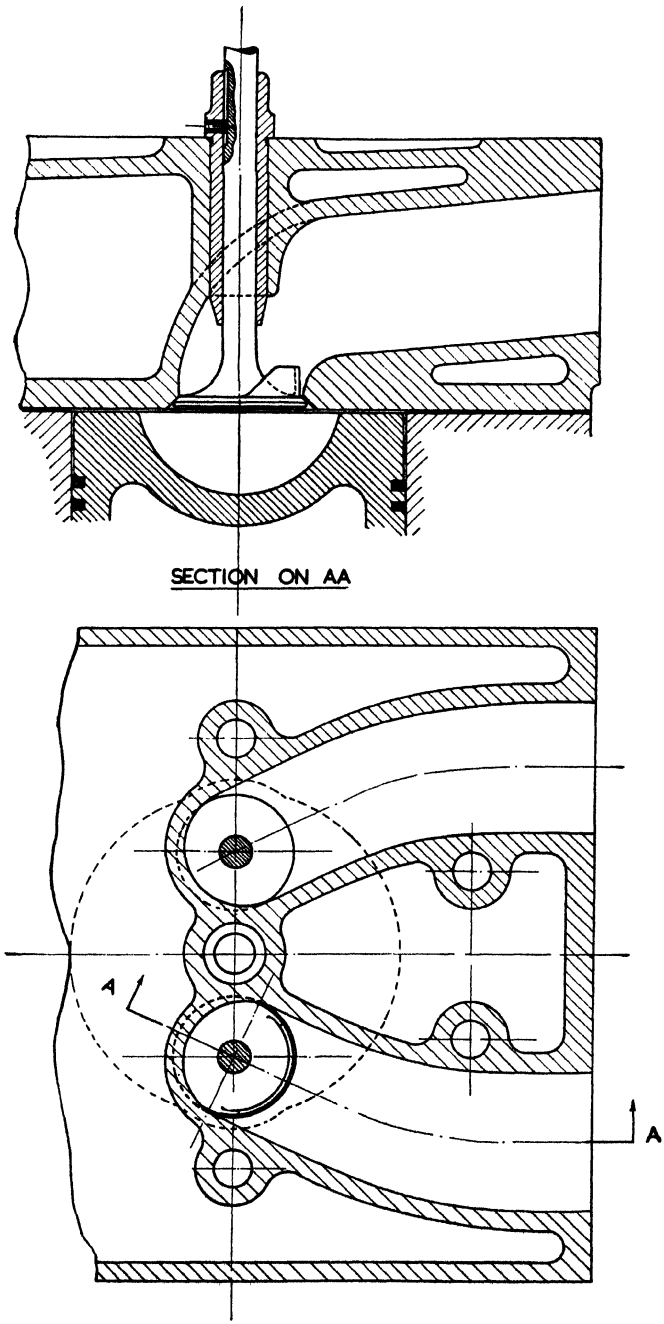

Fig. 7.6.—Partially masked inlet valve to produce air-swirl

Compression Swirl

An alternative course is to rely on compression swirl but, to achieve this, we must pass all or at least a substantial proportion of the air at high velocity through one or more restricted passages into a swirl chamber, see fig. 7.7. To this, in itself, there is little objection, but unfortunately it means that the combustion products must also pass

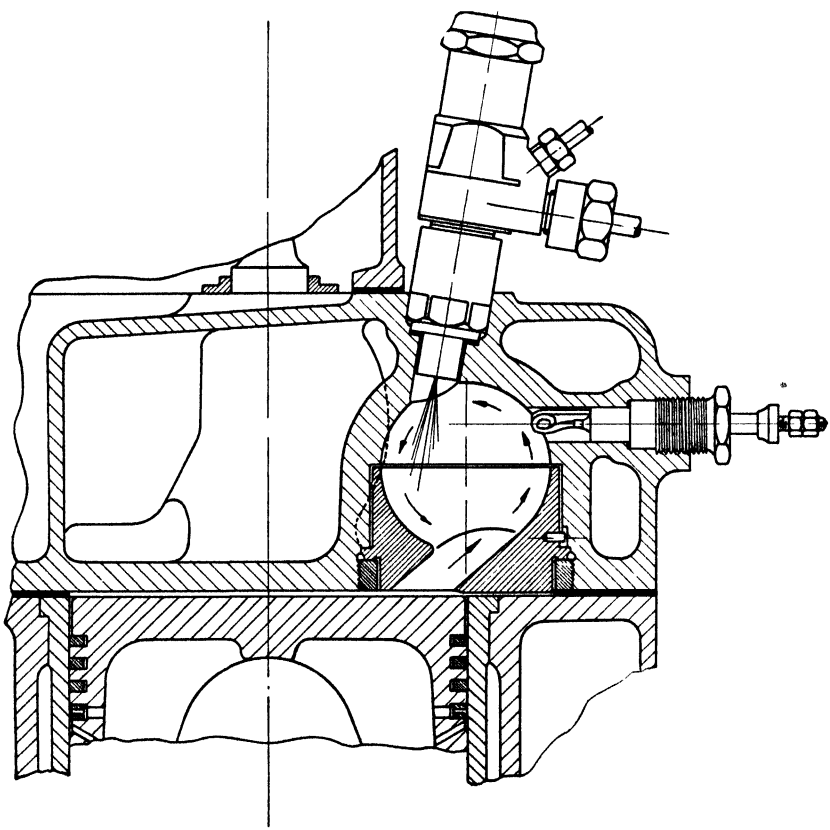

Fig. 7.7.—Compression swirl chamber

out through the same passages at a still higher velocity, and at a time when their temperature and pressure are at a maximum, hence there will be considerable loss of heat to the walls of the passage, and the greater the intensity of swirl the greater the loss. We can mitigate this loss of heat by employing a heat-insulated member to serve as a regenerator, and so, to some extent at least, can make it serve a useful purpose by transferring heat to another part of the cycle, but it would seem that so long as we depend upon compression swirl, we must

accept the fact that the loss of heat to the surface of the combustion chamber will be greater than with induction swirl and direct injection into an open chamber.

On the other hand, with compression-induced swirl and a single-orifice injector, we can consume a greater proportion of the air retained in the cylinder and so attain a higher mean effective pressure at the clean exhaust limit; also, since the injector is banished to one side of the cylinder, we have freedom to use larger valves with a freer entry and so maintain our volumetric efficiency and therefore our mean pressure up to considerably higher speeds. Again, with compression swirl we can make use of a pintle-type injector with its valuable self-cleaning properties.

The Pre-combustion Chamber

The third alternative, that in which air movement is either set up or accelerated by the pressure rise due to partial combustion, has some attractive possibilities. One example of this which used to be much in

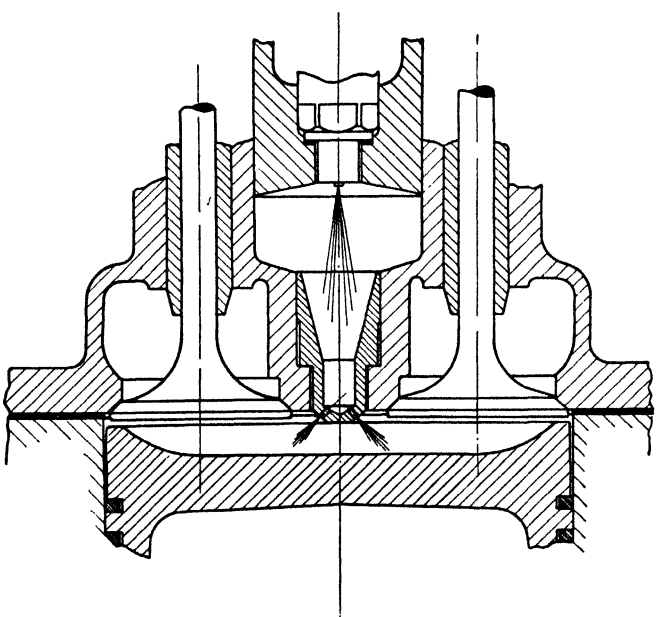

Fig. 7.8.—Pre-combustion chamber

favour in Germany is the so-called pre-combustion chamber, really a modern development of the early Brons engine. In this a small separate chamber communicates with the main combustion space through a number of relatively small holes somewhat like a pepper-castor (fig. 7.8). The fuel is injected into this pre-chamber where combustion is

initiated and the resulting pressure rise forces the flaming droplets, together with some air and their combustion products, at high velocity through the small holes, thus both creating violent turbulence in, and distributing them throughout, the air in the main combustion chamber. In this case the pre-combustion chamber performs much the same function as the compressed air in an air-blast injection engine, excepting only that to be effective the velocity of the burning mixture during its passage from the pre-chamber must be very great and the loss of heat, in consequence, very high. This form of chamber has also the advantage that it can be combined with a single-hole pintle-type injector but the disadvantage that, to be fully effective, the relatively large pre-chamber should be fitted centrally in the cylinder head, an arrangement which in a poppet-valve engine is geographically possible only when four valves are used.

The Air-cell Combustion Chamber

Yet another form of combustion chamber which has found favour, more especially in America, is the air-cell type. This, like the pre-combustion chamber, does not depend upon organized air-swirl and is a distinct species of its own. In this form, of which the Acro and Lanova are the best-known examples, a separate chamber, known as the air-cell, is used communicating with the main chamber through a narrow restricted neck. Instead, however, of injecting fuel into the separate chamber, the injector is placed in the main combustion space and squirts across this space to the open neck of the air-cell (fig. 7.9). In such a system the process of combustion is a little obscure. It would seem that the first droplets to be injected probably penetrate a short distance into the air-cell, that inflammation takes place initially just inside the neck thus causing a small pressure rise in the cell and an outflow of air into the main chamber; thereafter, and throughout the remainder of the process, combustion probably oscillates rapidly about the open neck of the air-cell. That it does not take place to any considerable extent within the air-cell itself is proved by the relatively low rate of heat transmission to the walls of the cell.

It is obvious that in such a system the bulk of the air entrapped in the air-cell can come into play and combustion be completed only rather late in the stroke; hence the effective expansion ratio is curtailed and both the efficiency and power output are somewhat limited in consequence. On the other hand, it has the compensating advantages that it gives easy starting and reasonably smooth running, with fairly low maximum pressures. It is probably best suited therefore to comparatively small engines of medium duty where a relatively high fuel consumption can be tolerated.

In this country, which is dependent upon imported fuel and therefore in which fuel economy becomes a vital factor, the choice of com-

bustion system has been narrowed down to that of induction-induced or compression-induced air-swirl. Each has its own particular advantages and disadvantages, and the final choice must depend largely upon the service for which the engine is intended.

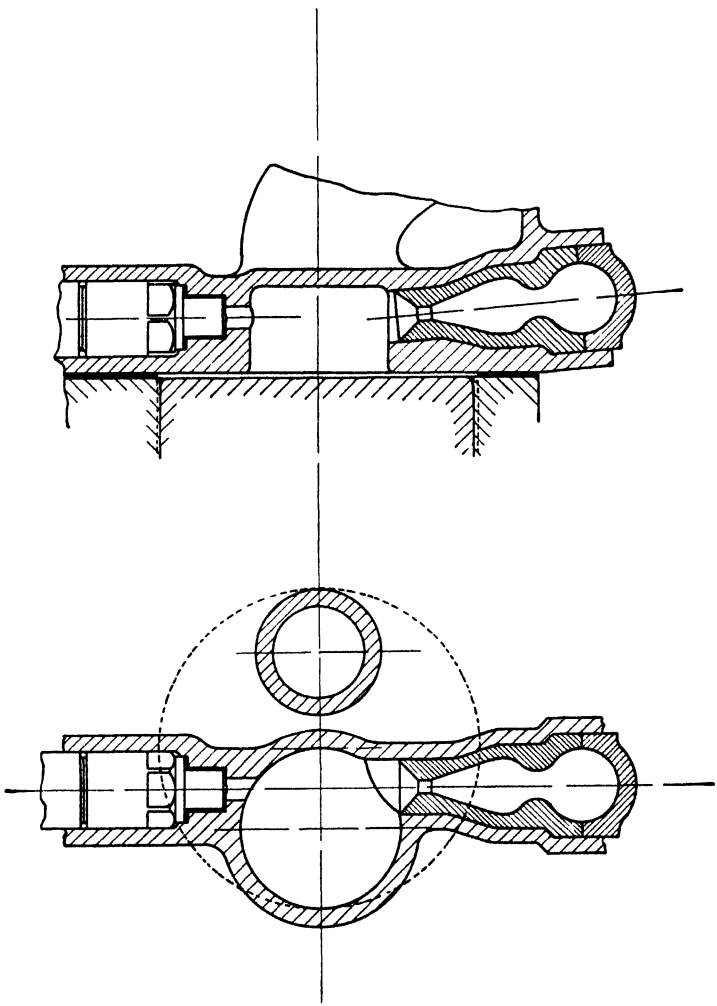

Fig. 7.9.—Air-cell combustion chamber

The direct-injection engine employing induction-induced air-swirl and a multiple-orifice injector has the advantage that it can work with a lower intensity of swirl and therefore that the loss of heat by convection is less. It has the further advantage that the burning mixture need not pass through any restricted passage during combustion or expansion, and on this score again the direct loss of heat is less; thus it

starts with the advantage of a higher thermal efficiency due to the lower direct heat losses. It has the advantage also that by reason of the lower intensity of air-swirl the loss of heat during the compression stroke is

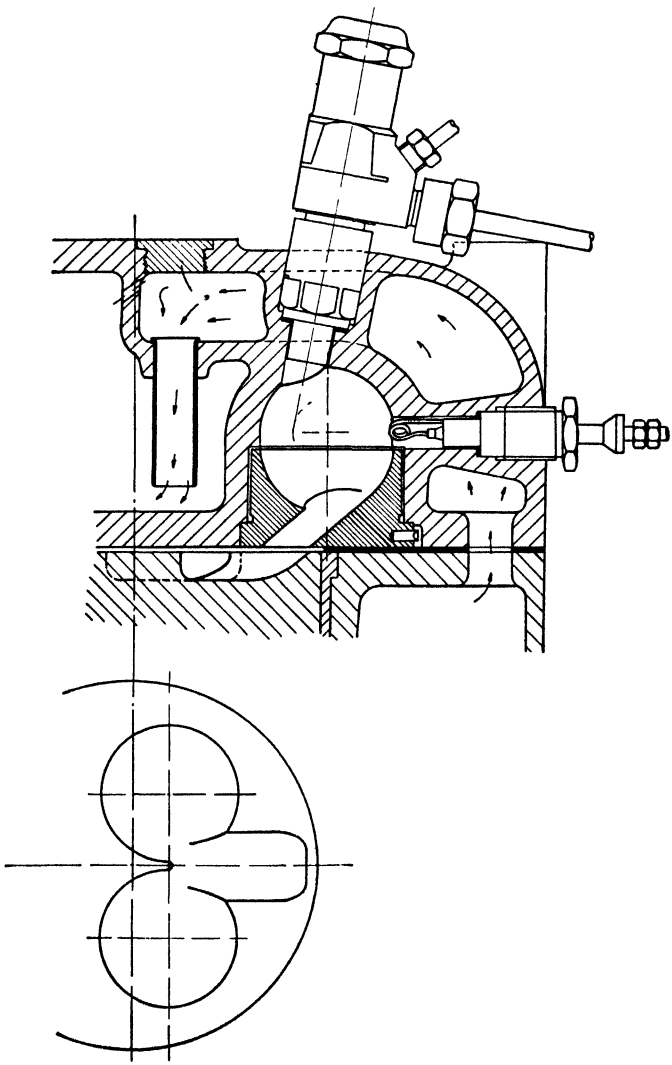

Fig. 7.10.—Comet Mark III combustion chamber

less, hence a lower ratio of compression will suffice to provide the temperature margin needed to ensure ignition under adverse conditions as when starting from cold, or running at high speed on a very light load.

These are very important attributes which ensure for the induction-swirl direct-injection engine an advantage in fuel economy of the order of 10 per cent as compared with the pure compression-swirl type using a separated combustion chamber.

Between these two extremes lies the " Comet Mark III " type of combustion chamber (fig. 7.10), in which about 50 per cent of the air is subjected to compression-induced swirl, and the remaining 50 per cent is left more or less stagnant in depressions in the piston and set into motion only after combustion has started. This, as would be expected, has a thermal efficiency about midway between the direct-injection engine with induction swirl and the pure compression-swirl engine but, because of its unimpaired breathing capacity on the one hand, and its greater utilization of the retained air on the other, the power output obtainable is considerably greater than either. Since, however, combustion is initiated within the swirl chamber and therefore in air which has lost some heat due to compression swirl, it is not normally so good a cold-starter as the direct-injection engine, for, at starting, the heat-insulated member is, of course, quite cold.

In the direct-injection engine of the four-cycle poppet-valve type the combustion chamber is, and must be, formed in the piston. In practice, many different shapes are employed and advantages claimed for all of them. Fig. 7.11 shows typical forms in successful use. All depend, to a greater or lesser extent, on the combination of organized air-swirl produced during induction with a greater or lesser amount of " squish ", which serves both to accentuate the swirl and probably to introduce also a vortex effect, giving to the air a spiral movement. Considerable doubt exists as to the precise effect of " squish " and, as usual, where doubt exists, theories abound. Certain it is that " squish " plays an important part, for all direct-injection engines are very sensitive to the clearance between the flat portion of the piston and the cylinder head upon which the degree of " squish " depends.

The fact that so many widely different shapes of chamber appear, when fully developed, to give almost equally good results clearly indicates that it is the matching of the fuel and air movement that is important rather than the particular path of either. Our objective clearly is to bring the largest possible proportion of the air into contact with the fuel jets during the combustion process, and this will depend upon both the number and aiming of the fuel jets and the path and velocity of the air. Since the latter is always somewhat indeterminate, we are forced to a large extent to depend upon trial and error. We can decide to use a certain injector with jets radiating at some pre-determined angle, and then proceed, by trial and error, to find the form of combustion space which will give the most effective pattern of air flow, or, conversely, we may decide to use a certain form of combustion space and then find, by trial and error, the most effective disposition of the

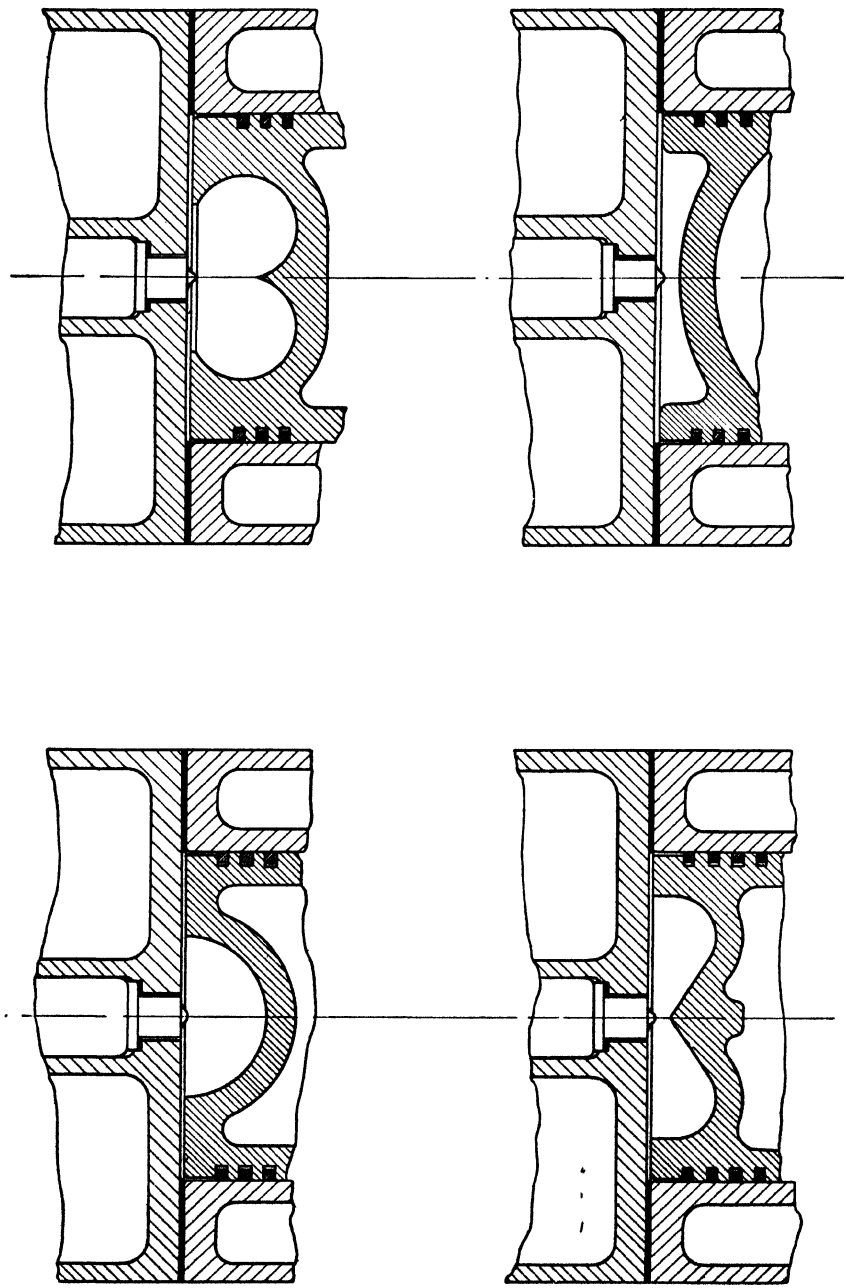

Fig. 7.11.—Various types of direct-injection combustion chambers

fuel jets. The most successful practical solution will be that which contrives to utilize the greatest proportion of the air with the minimum number of fuel jets and the minimum intensity of air-swirl.

In the direct-injection engine of the poppet-valve type it is not practicable to employ a heat-insulated member as a means of raising the compression temperature and pressure and so reducing the delay period, for no satisfactory means have yet been found for attaching such a member to a high-speed reciprocating piston nor could the weight of such a part added to that of a reciprocating member be tolerated; moreover, if attached to the piston it would be in the path

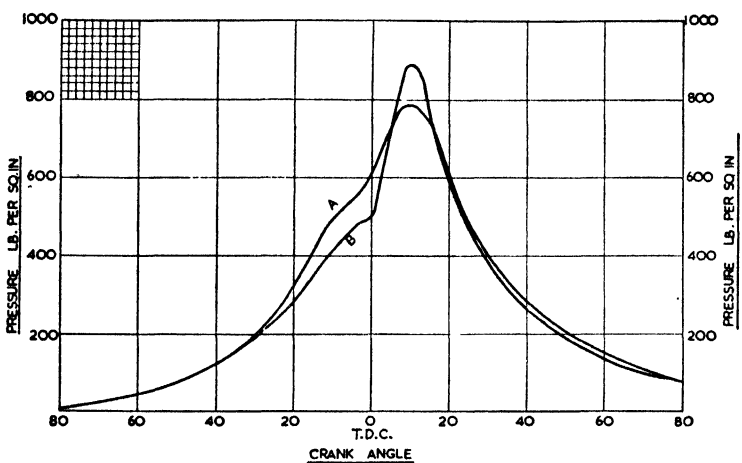

Fig. 7.12.—Typical indicator diagrams: (A) from swirl-chamber engine and (B) from direct-injection engine

of, and so impart some of its heat to, the entering air, which is most undesirable; hence this means of raising the compression temperature without reducing the volumetric efficiency is impracticable.

As a consequence the delay period is somewhat prolonged and the pressure rise following the delay period is both greater and more rapid than in a compression-swirl engine, with the result that, although a lower ratio of compression can be employed, the maximum pressure is at least as high or generally considerably higher. Thus fig. 7.12 shows typical indicator diagrams taken from the same engine at the same speed and mean pressure, (A) when working with compression swirl and (B) with direct injection and induction air-swirl.

In either a sleeve-valve four-stroke or a two-stroke engine in which the combustion chamber is situated in the stationary cylinder head and well out of the path of the incoming air, it is possible to combine a heat-insulated member with direct injection into an open chamber and so combine the virtues of the compression-swirl engine in the way of a

short delay period, small pressure rise and smooth running, with the low heat loss and higher thermal efficiency of the direct-injection engine (see figs. 7.2 and 7.13), but no practical way has yet been found of achieving this in a four-cycle poppet-valve engine.

In the direct-injection engine using multiple-orifice jets it is essential that the injector shall be placed centrally, or very nearly centrally, in the cylinder head. If the injector be offset in relation to the bowl in the piston, then an asymmetrical pattern of jets is needed, and further, the jets must be of varying sizes and lengths to give the appropriate quantities and degrees of penetration to match the differing radii of the combustion space, while the angular position of the injector nozzle must be located very accurately.

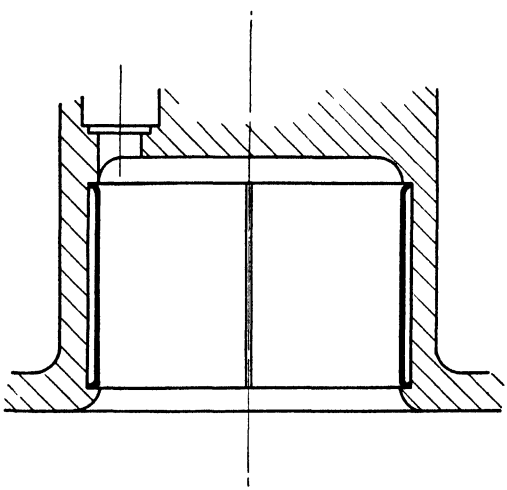

Fig. 7.13.—Heat-insulated lining in sleeve-valve combustion chamber

If the bowl in the piston be offset to any considerable extent, then both the pattern of the air-swirl will be disturbed by the asymmetrical " squish " and there will be a greater tendency for organized air movement to give way to general turbulence. In either event the problem of matching the fuel and air movements will be greatly intensified and will become well-nigh impossible if the offset of either the injector to the bowl or of the bowl to the cylinder axis be considerable.

With two valves per cylinder it is possible without letting the valve heads overlap the cylinder bore, even in a very small cylinder, to provide breathing capacity sufficient for a piston speed of 2000 ft. per minute and still leave an adequate passage-way for cooling between the valves. If, however, the injector must be placed centrally and therefore between the two valves, then either the area of the latter must be reduced considerably, or they must be allowed to overlap the

cylinder bore. In the former case, the breathing capacity will be much reduced and even in a relatively large cylinder will probably be no more than adequate for a piston speed of 1600–1700 ft. per minute; also it will diminish rapidly with decrease of cylinder size, since there is clearly a lower limit both to the dimensions of the injector and to the thickness of the metal in the inlet and exhaust elbows. A little can be done by offsetting both the valves and the injector in opposite directions, but the scope in this direction is small.

If the valve heads overlap the cylinder bores then, on the one hand, this leaves pockets of air to which the fuel cannot reach and from a mechanical point of view it is objectionable, more especially when detachable liners are employed, since it involves gashing out the liner.

It would seem that in the case of the small high-duty direct-injection engine, as in that of the pre-combustion chamber type, there is a very good case for the use of four valves per cylinder, even though this must add to the cost and mechanical complexity of the engine.

In the direct-injection engine of the poppet-valve type, we are forced, on account of our limited air-swirl, to employ multiple-orifice injectors. In a small engine the size of the individual orifices becomes very minute, e.g. less than 0·010 in. in the case of cylinders of about 5 in. bore. Such small orifices are liable to be choked either by particles of metal or grit carried along with the fuel, or by carbon formation.

By dint of meticulous filtration it is generally found possible effectively to guard against the former, though the risk of foreign matter, scale, etc, being left in the system between the last filter and the injector orifices always remains.

As to carbon formation this appears to be due to:

(1) Dribbling, due to sluggish closing of the injector valve.
(2) The frying up of the fuel left in the orifice passage.

Both can, to a large extent, be prevented by the use of a very heavy loading on the injector spring to ensure:

(*a*) a really sharp cut-off at the end of injection, and
(*b*) the maintenance of a very high velocity through the actual orifice passages in order to scour away any partially formed carbon.

To this end it is usual to load the injection valves in direct-injection engines to a pressure of not less than 2500 lb. per sq. in. Such heavy initial loadings, added to the high resistance imposed by the orifices themselves, inflict a heavy strain on the fuel injection system and renders it very sensitive to both the elasticity of the fuel itself (which even when entirely free from any aeration has a modulus of elasticity of only about 500,000) and to that of the pipe-work, etc.

Moreover, the smaller the individual orifice, both the higher the pressure required to provide the necessary penetration and the finer the pulverization of the fuel particles. As explained previously, the smaller and more numerous the droplets, the greater the rate of pressure rise following ignition; hence, *ceteris paribus*, the higher the fuel line pressure the rougher the running of the engine, but, at the same time, the easier the starting from cold.

In the direct-injection engine although an air-swirl is used to bring the fuel and air into contact, yet this cannot be effective unless the fuel jets have sufficient momentum to penetrate across the combustion chamber, and that in the short time available. Since the paths of the air and of the fuel are more or less at right-angles to one another, the air movement will not assist the fuel to penetrate, and for this we must rely on fuel pressure alone. With very small orifices, however, increase of fuel pressure beyond a certain point will result in increased pulverization rather than penetration, and there comes eventually a limit to the penetration attainable. It is true that the length of path through which the fuel jet is called to penetrate bears at least some relation to the size of the orifice, but, generally speaking, the smaller the cylinder size the greater the difficulty in ensuring sufficient penetration.

All the above considerations point to the desirability of using the largest and therefore minimum possible number of individual orifices.

In a compression-swirl engine there is clearly no limit to the intensity of swirl we can supply, for this is determined merely by the shape and cross-sectional area of the communicating passage; hence we can employ a single-orifice injector, preferably of the pintle or self-cleaning type, but, in any case, with a relatively large orifice, and since we need only a fairly coarse spray, no very high fuel pressures or injector loadings are required, thus the burden on the fuel injection system is reduced and the precision of timing and of duration of injection is less disturbed by the length or capacity of the fuel piping or by the elasticity of fuel, etc.

Again, since the injector is banished to the side of the cylinder head, it does not restrict the size of valves we can use, hence our breathing capacity can be much increased.

These are all weighty advantages which increase in relative importance as the size of the cylinder is diminished.

On the other side of the picture is the considerable loss of heat to the walls of the combustion chamber and, more especially, to those of the connecting passage during transfer of the combustion products from the swirl chamber to the cylinder proper. This drawback is unfortunately inherent in all forms of compression-swirl engines. To acquire the swirl we need, we must force the air through a somewhat narrow passage during compression, and symmetry compels that it shall pass out again, through the same restriction, during combustion

and expansion, unless some means can be devised for suddenly removing the restriction once combustion is well under way and restoring it again before the next compression stroke—hardly a practicable proposition.

By way of compensation the scrimmage in the passage probably serves to foster the intimacy of the fuel and air and to complete any introductions which the air-swirl may have neglected. To some extent the loss of heat in the transfer passage can be mitigated by forming this passage in a separate member, heat-insulated from the cylinder head by a small air gap. Thus in the " Comet " type of swirl chamber, the lower half of the sphere comprising the transfer passage is made as a separate member of heat-resisting steel in contact with the cylinder only at the retaining flange.

It is commonly supposed that the air pumping work involved in forcing the air through the transfer passage accounts for an appreciable expenditure of power and some colour is given to this assumption by the higher apparent total friction losses when the engine is motored. These are due, however, not to pumping work but rather to the negative value of the compression/expansion loop due to heat loss during this period, for, when motoring, the walls of the passage are relatively cold. In fact, the actual air pumping work, as apart from heat loss, appears to be almost negligible.

When running, this lower member attains a temperature ranging from 450° C. to 700° C. depending on the speed and load; that is to say, it is, at all times, except when starting from cold or after prolonged idling, above the normal compression temperature, but, of course, much below the combustion temperature. Thus, it serves as a thermal regenerator receiving heat during combustion and expansion and returning heat to the air during the compression stroke. Fig. 7.14 shows typical thermocouple readings of the actual temperature of the hot member, when running at a constant M.E.P. but varying speed, and at constant speed but varying M.E.P. In this case the observations were made on a " Whirlpool " type swirl chamber to be described on p. 122. In this form of chamber the temperature level of the heat-insulated member is higher throughout the whole range of speed and load but the trend is exactly the same as in the " Comet " type. Since the normal compression temperature corresponding to a compression ratio of 17 : 1 is approximately 500° C., it will be seen that, under almost all working conditions, the temperature of the hot member is above the maximum temperature due to compression, and of course well above the compression temperature at the time when the mass flow of air through the passage is at its maximum, i.e. between 30 and 10 degrees before top centre. Moreover, since the temperature of the heat-insulated member rises with increase of speed, this feature assists in keeping the combustion process in step with the r.p.m. Thus fig.

7.15 shows, in terms both of time and of crank angle, the observed variation in the delay period with increase of speed, over the range 500–2000 r.p.m. In this case the observations were made on an engine with a " Whirlpool " chamber but they apply almost equally to the " Comet " type.

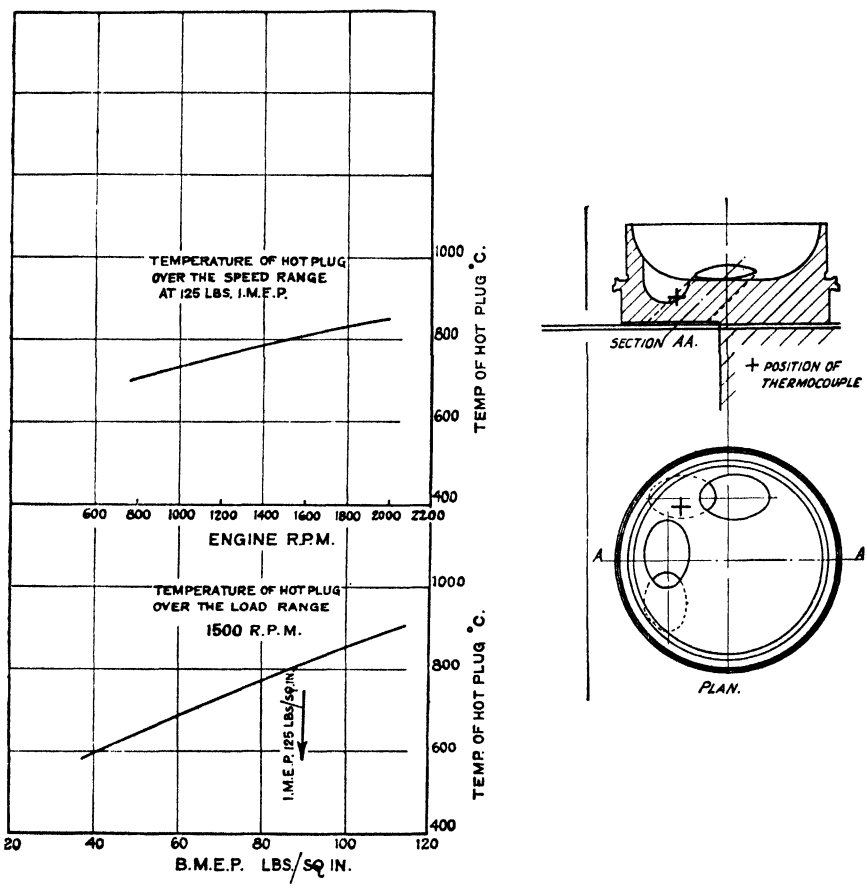

Fig. 7.14.—Curves of hot-plug temperature

Single-cylinder engine: bore $4\frac{3}{4}$ in. × stroke $5\frac{1}{2}$ in., " Whirlpool " cylinder head, compression ratio 17 : 1

The effects, then, of the heat-insulated member are:

(1) By its high surface temperature, to eliminate the loss of heat during transfer from the cylinder to the swirl chamber, under all except cold-starting conditions.

(2) To raise the compression temperature at any given compression ratio and that without impairing the volumetric efficiency.

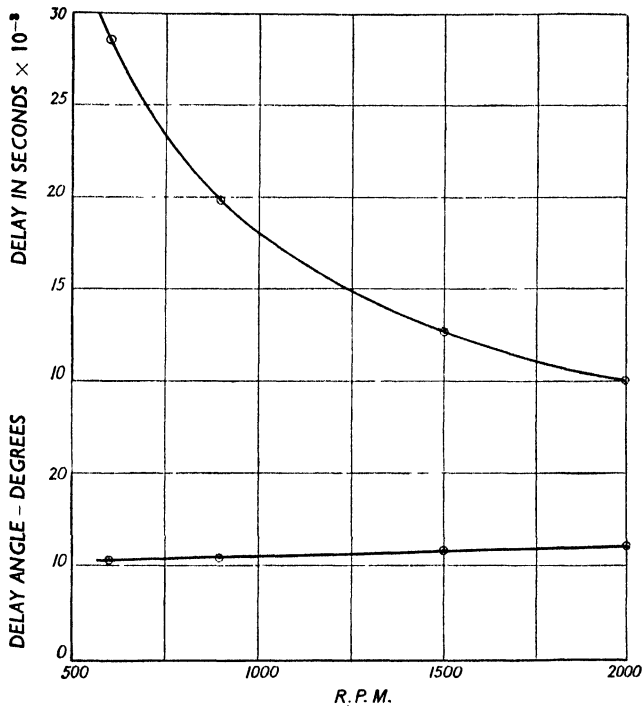

Fig. 7.15.—Curves showing ignition delay in relation to speed, with insulated member forming lower half of chamber

"Whirlpool" type, compression ratio 16 : 1. Fuel, 40 cetane

(3) Its surface temperature is at all times high enough to prevent the adhesion and building-up of carbon deposits. This attribute becomes the more important the higher the ash content of the fuel.

(4) When the burning droplets impinge against a relatively cold surface, combustion is arrested and products of partial combustion, such as aldehydes, become stabilized, thus giving to the exhaust a very pungent and acrid smell. So long as the temperature of the surface against which the jet may impinge is well above the ignition temperature of the fuel, this will not occur and the exhaust is almost odourless.

To be fully effective, however, the heat-insulated member must be so positioned that it is out of the path of, and therefore will not give up heat to, the entering air.

Despite many attempts, no entirely satisfactory technique has yet been arrived at for measuring the swirl ratio in a compression-swirl engine, as has been done in the case of the sleeve-valve engine, but with the experience gained from the former it has been easy by trial and error to arrive at both the optimum swirl ratio and the optimum

relationship between swirl ratio and rate of fuel injection, since the former can be varied at will, and that over a wide range, merely by varying the area of the transfer passage.

To find the optimum direction for the fuel spray proved more troublesome, but a number of cylinder heads were made with different positions for the injector, while the injector itself was mounted in a spherical housing and so could be aimed in any direction. Such experiments revealed that the best results were obtained when injecting downstream with the centre of the jet passing about midway through the radius of the sphere and aiming at a point just upstream of the passage entry.

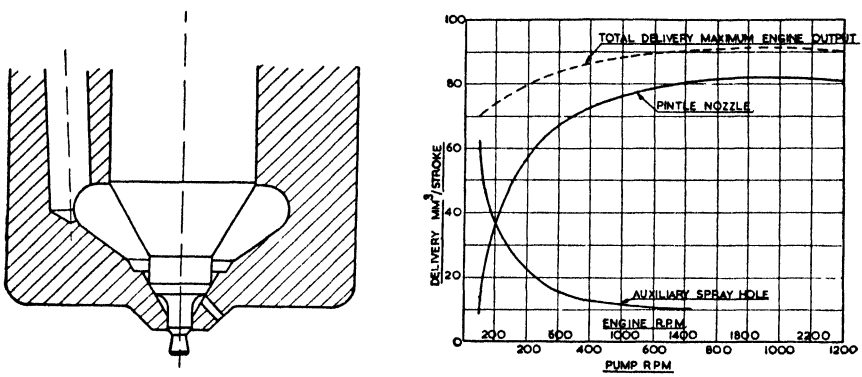

Fig. 7.16.—" Pintaux " injector, and graph showing its behaviour

As to the process of combustion, there is evidence to show that ignition starts among the droplets near the far end of the injection path, as indeed would be expected, for the droplets in this position were the first arrivals and have therefore been the longest exposed to the high-temperature air. As the temperature rises ignition spreads back along the injection path until the later arrivals ignite at only a short distance from the injector. Since the direction of injection is downstream of the air-swirl, the products of combustion are, throughout, being swept away from and ahead of the injection path. If the injection be directed upstream then, on account of the much higher relative velocity and therefore greater rate of heat transfer between the fuel droplets and the air, ignition starts much earlier, the delay period is reduced and starting from cold is very much improved; but with the air and fuel in contra-flow, the products of combustion are wafted back on to the path of the fuel stream, thus suffocating the later arrivals. Thus upstream injection gives excellent starting from cold and very smooth running at light loads, but the exhaust becomes smoky and the efficiency falls rapidly due to incomplete combustion at the higher loads. With injection aimed through the centre of the

sphere somewhat the same applies, i.e. the cold-starting is improved but the maximum power and efficiency are lowered.

These observations led to the development of what has come to be known as the " Pintaux " injector designed to give a small pilot injection upstream and slightly in advance of the main downstream injection. This is a modified form of pintle injector but with a side hole drilled at an angle and pointing either upstream or across the centre of the sphere as shown in fig. 7.16. When the needle valve first starts to

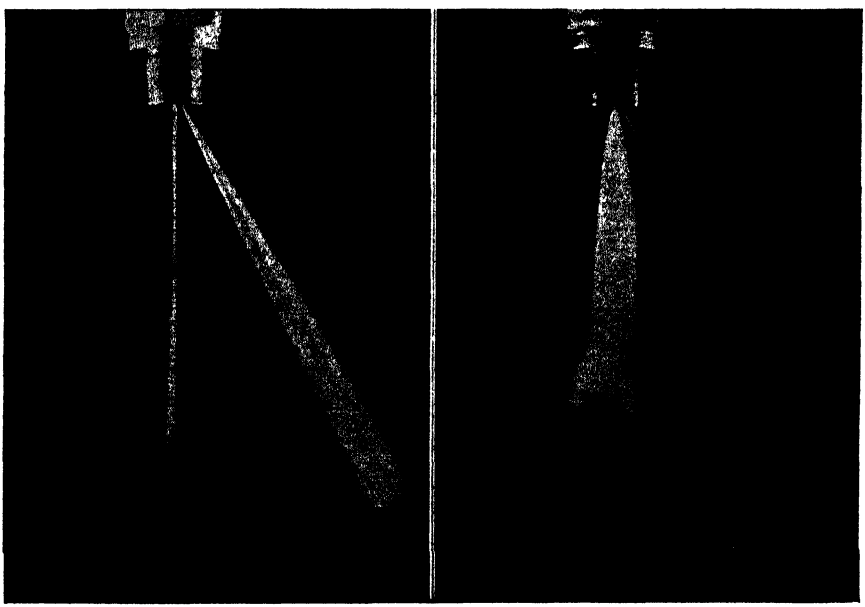

Fig. 7.17—Starting conditions Fig. 7.18—Full-load conditions

Spray from " Pintaux " injector

lift, the side hole is opened but the main jet still partially closed by the pintle, with the result that the bulk of the fuel is delivered through the former, thus giving, in effect, a pilot injection. At starting speeds, viz. below 120 r.p.m., the main needle does not lift fully, and by far the bulk of the fuel is delivered through the side hole in an upstream direction, but at all normal running speeds the needle lifts fully and only a very small proportion is delivered through the side, see figs. 7.17 and 7.18, which are photos of the fuel spray under starting and full-load conditions. The effect of this is to improve enormously the cold-starting, for the engine can be started from cold at the same turning speed at an ambient temperature of from 20° to 25° C. lower than with the normal pintle injector. The " Pintaux " injector, in common with all multiple-orifice injectors, is open to the objection

that the small side orifice can be choked; it therefore requires the same high standard of filtration as in a direct-injection engine, but with the difference that, if the side hole becomes choked, it is the cold-starting only that is affected to any measurable extent, and, in a multi-cylinder engine, it requires the choking of the majority of the injectors before even the cold-starting is noticeably affected.

In the development of a compression-swirl engine of the "Comet" type, the original aim had been to force into the swirl chamber as nearly as possible the whole of the air in the cylinder, for it was reasonable to suppose that only the air within the chamber could be utilized

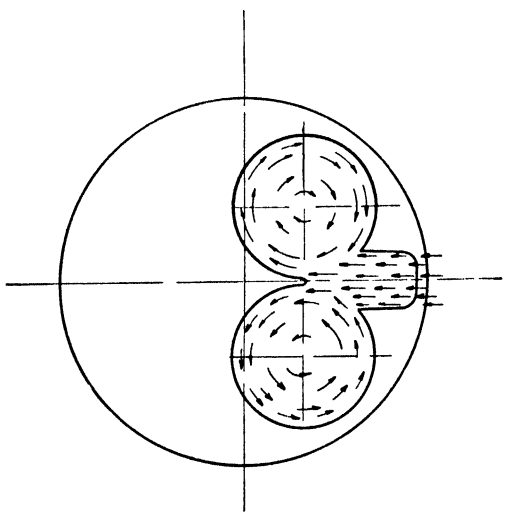

Fig. 7.19.—Air movement in piston cavities, Comet Mark III combustion chamber

efficiently. The necessity for a liberal mechanical clearance between the piston and the cylinder head and below the valve heads make it impossible to contain more than between 75 and 80 per cent of the air within the chamber, and the higher the ratio of compression or the smaller the engine, the greater the proportion of outlying and apparently inaccessible air. Research on the "Comet" type revealed, however, that well over 80 per cent of the air was being consumed, and that with a perfectly clean exhaust, thus indicating that some, at least, of the thin lamina of air above the piston must be playing an effective part. Such observations led to the development of the "Comet Mark III" type of combustion chamber in which about 50 per cent of the accessible air is contained in cups in the piston crown and the remainder forced into the swirl chamber. Thus rather less than 50 per cent of the total air content is constrained to pass in and out of the swirl chamber and the heat losses due to transfer are approximately halved.

In order to make the best use of the air in the piston bowls these are arranged as two cup-shaped depressions. From the overlapping edges a short passage is formed leading to the swirl chamber (fig. 7.19). Fuel is injected through a single-orifice pintle-type injector into the swirl chamber in the usual manner and ignition takes place therein. The resulting pressure rise causes the still burning droplets together with some air and their products of combustion to be driven out from the swirl chamber down the passage until they meet the promontory dividing the two depressions; here the stream is split into two, thus

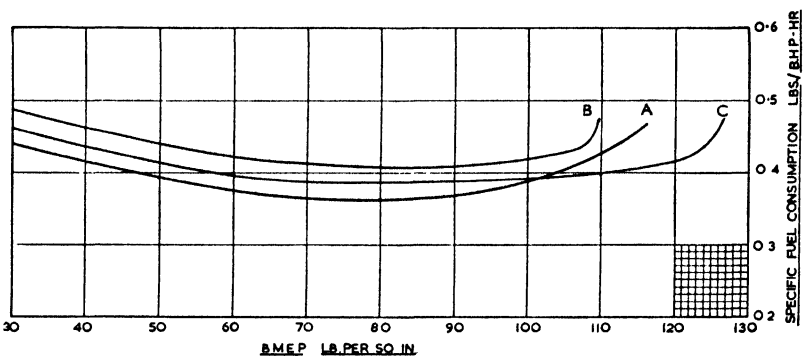

Fig. 7.20.—Comparative consumption loops

Six-cylinder four-cycle poppet-valve engine, bore $4\frac{3}{4}$ in. × stroke $5\frac{1}{2}$ in.
Speed in all cases 1400 r.p.m.

(A) Direct-injection cylinder head and piston with induction air-swirl and a multiple-orifice injector.
(B) Normal " Comet " head and flat-topped piston with separate swirl chamber and compression-induced swirl.
(C) " Comet Mark III " head and piston.

setting up a swirl in each of the depressions but in opposite directions, so that the air ahead of the burning stream is swept around and so into and across the stream issuing from the passage. By such means it has been found possible to consume up to as much as 90 per cent of the total air with a smokeless exhaust, and so in an unsupercharged engine to realize an indicated mean pressure of over 160 lb. per sq. in.

In the " Comet Mark III " system the air-swirl in the primary combustion chamber is produced by mechanical means, while that in the piston bowls is produced solely by the outrush of burning products from the primary chamber, as in a pre-combustion chamber engine, but with the difference that the passage is very much larger, and both within and without the primary chamber a definitely organized air-swirl is employed as against the general turbulence of the pre-combustion chamber.

In effect the " Comet Mark III " is a half-way house between the

pure compression-swirl chamber and the direct-injection engine and, as would be expected, its thermal efficiency lies midway between the two, but owing to the greater air utilization, its power output is greater than either. Fig. 7.20 shows comparative fuel consumption loops from the same engine when fitted with (A) a direct-injection cylinder head and piston, with induction air-swirl, and a multiple-orifice injector, (B) a normal " Comet " head and flat-topped piston with separate swirl chamber and compression-induced swirl, and (C) a " Comet Mark III " head and piston.

In all cases the compression ratio was the same, viz. 16 : 1, as also the valve timing.

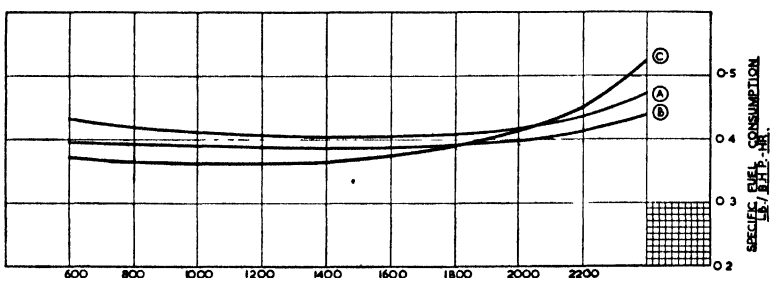

Fig. 7.21.—Comparative fuel consumption tests

Six-cylinder four-cycle poppet-valve engine, bore $4\frac{3}{4}$ in. × stroke $5\frac{1}{2}$ in.
Speed range 600–2400 r.p.m. at 80 lb. per sq. in. B.M.E.P. in all cases

(A) " Comet " combustion chamber.
(B) " Comet Mark III " 50/50 combustion chamber.
(C) Direct-injection open-type combustion chamber.

Fig. 7.21 shows the comparative fuel consumptions over the speed range at a B.M.E.P., in all cases, of 80 lb. per sq. in.

Fig. 7.22 shows a cross-sectional arrangement of an eight-cylinder " Comet Mark III " engine of 5·4 in. bore by 6 in. stroke developed in the author's laboratory during the late war.

Fig. 7.23 is a summary in contour form of the performance of this engine.

It is a characteristic of the " Comet " type, and indeed of most compression-swirl engines with single-orifice injectors, that the exhaust continues to be quite free from smoke, and the specific fuel consumption to remain low up to almost the limit of M.E.P., after which point any further increase in fuel injection results in a sudden onset of exhaust smoke and little or no further increase in power. Thus fig. 7.24 shows a typical consumption loop taken from a relatively larger experimental " Comet Mark III " engine when running at constant speed but with variable load.

Up to a B.M.E.P. of 125 lb. per sq. in. the exhaust is completely

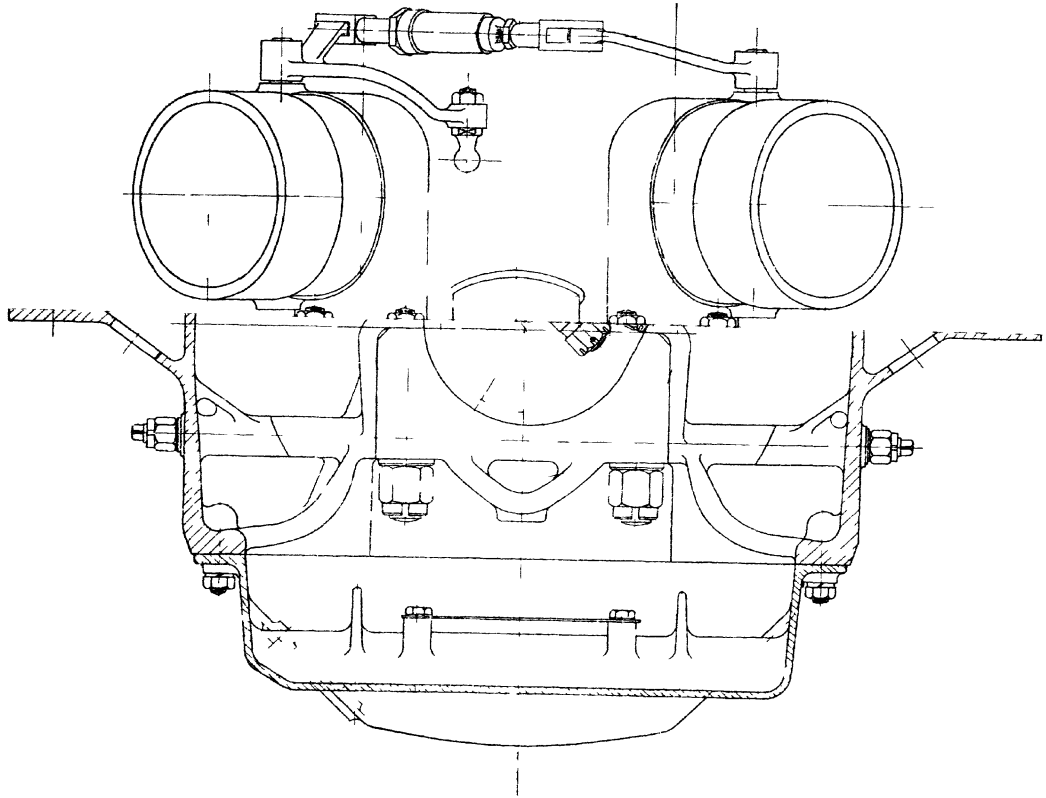

Fig. 7.22. — Cross-sectional arrangement of 8-cylinder V-type engine bore 5 4 in , stroke 6 in "Comet Mark III" combustion chamber

Facing p. 120

invisible against a standard background, but above this any further increase in fuel injection resulted merely in a smoky exhaust and very little further increase in M.E.P.

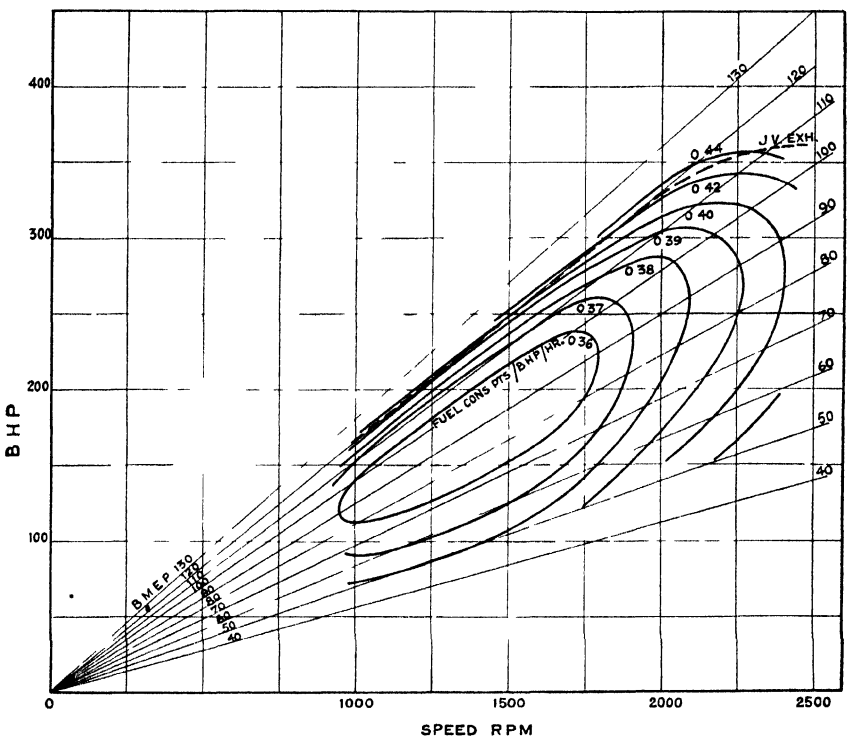

Fig 7 23 —Performance contour curves of 8 cylinder engine, bore 5 4 in., stroke 6 in.

The "Comet Mark III" type of combustion chamber was developed with a view to obtaining the maximum possible power output with a clean exhaust, combined with a reasonably low fuel consumption and smooth running but with the accent on power output.

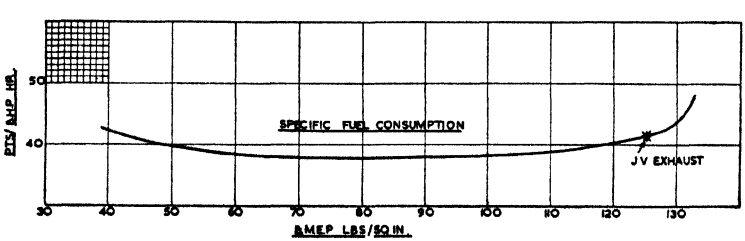

Fig. 7.24.—Load range consumption curve at 1000 r.p.m., engine EX239, "Comet Mark III", bore 7 in., stroke 7¾ in. J.V. exhaust = just visible exhaust

In order to meet the demand for an engine which would start very easily from cold, and be very smooth and quiet running, an alternative form of compression-swirl engine, which has come to be known as the "Whirlpool" type (fig. 7.25), was developed in the author's laboratory. In this case the swirl chamber is a flattened sphere and the swirl is imparted by two passages formed in the heat-insulated

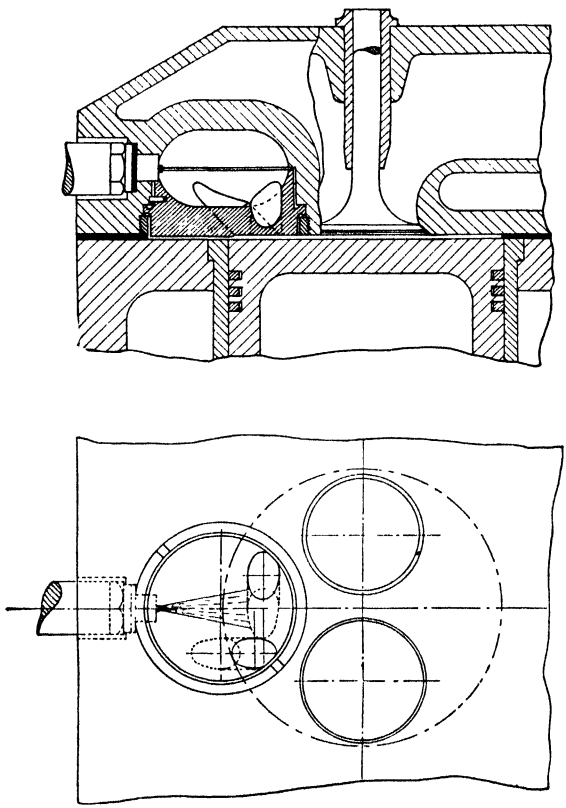

Fig. 7.25.—"Whirlpool" combustion chamber

member. The fuel jet from a single-orifice pintle-type injector passes directly across the centre of the chamber and is aimed towards the entrance to the leading passage. The arguments underlying the development of this form of chamber were:

During researches into the "Comet" type it had been found, as stated previously, that excellent cold-starting and very smooth running could be obtained when the fuel jet was directed through the centre of the sphere and aimed at the mouth of the passage so that the tip of the spray should meet, in contra-flow, the hottest air, i.e. the last to enter by the passage. It was found, however, that under these circumstances

the exhaust became smoky even at a very low power output, due to the fact that the products of combustion were driven back on to the fuel spray and so tended to suffocate it. In the " Whirlpool " chamber two passages are provided and the jet directed towards the mouth of the leading passage, but suffocation is prevented by the flow of fresh air from the second passage which sweeps past the jet, and so scours away the products of combustion. Thus the advantage of excellent cold-starting and of smooth running due to the very short delay period could be combined with a reasonably high power output, though not so

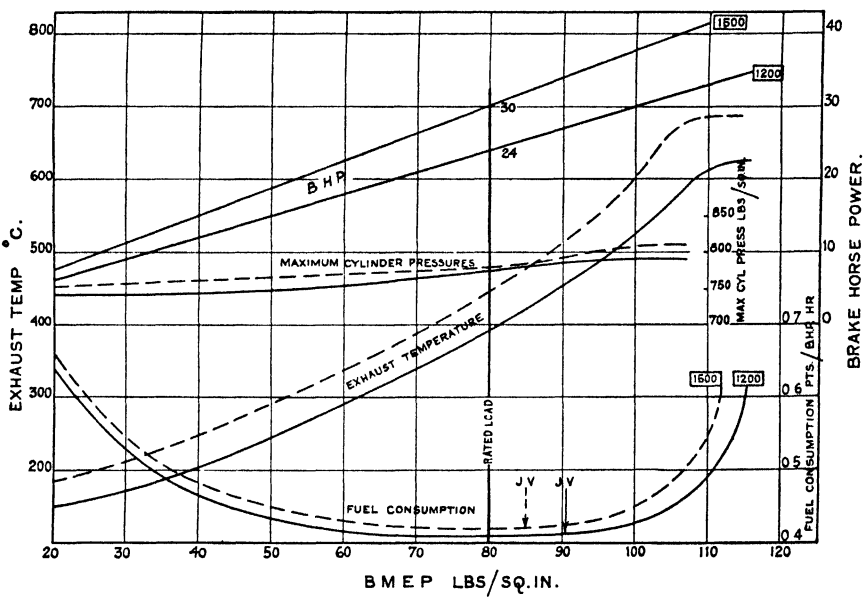

Fig. 7.26.—Performance curves of small " Whirlpool " engine, bore 3¾ in., stroke 4½ in.

high as in the " Comet " type. The use of two passages, of course, increases the direct heat loss, thus the efficiency is necessarily somewhat inferior to that of the " Comet " type, and considerably inferior to that of the direct-injection or " Comet Mark III ". In the case of small engines, however, ease of starting, smooth and quiet running, and the ability to run on a wide range of fuels is often of more importance than the last word in either fuel economy or power output.

In the " Whirlpool " chamber it has not yet been found possible to utilize, with a clean exhaust, so large a proportion of the air as in the " Comet " chambers, nor is the transition from a clear to a smoky exhaust so abrupt—in this respect its behaviour resembles more nearly that of the direct-injection engine.

Fig. 7.26 shows graphs of the performance of a small four-cylinder engine; these may be regarded as typical of this form of chamber.

Fig. 7.27 shows indicator diagrams taken over the range both of speed and of torque, all with a fixed injection timing, from which it will be seen that the delay period appears to be almost negligible and the rate of pressure rise following the delay is as low or lower than that of the average petrol engine, hence the smoothness of running and absence of Diesel knock.

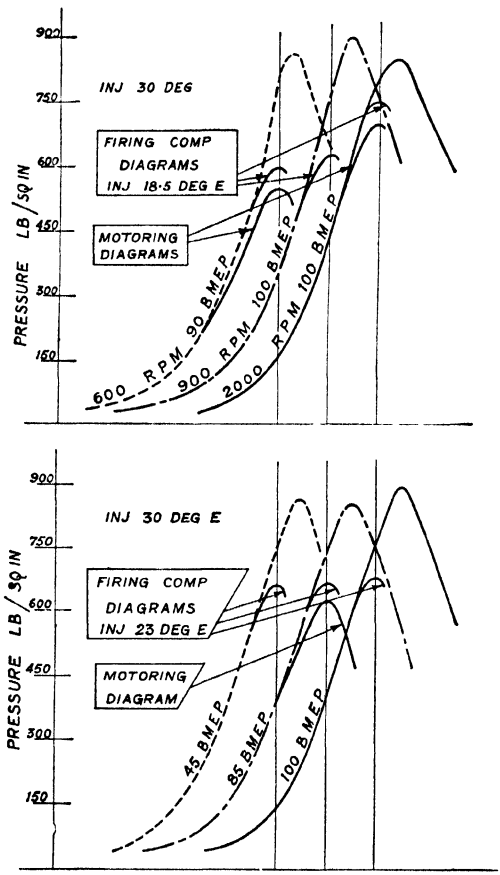

Fig. 7.27.—Indicator diagrams for small " Whirlpool " engine

The author has concentrated on the two forms of compression-swirl engine with the development of which he has had first-hand experience. There are, of course, many other examples of the same general type which differ, but only in detail, while the same general arguments and much the same characteristics apply to all.

Of the various forms discussed, it would seem that the open-chamber direct-injection type as applied to the sleeve-valve engine is the most favourable of all, for:

(1) It combines an open chamber with a single-orifice injector which may be of the self-cleaning pintle type.

(2) The open combustion chamber can be in the cylinder head, where it can readily be water-cooled, rather than in the piston; hence the latter has much less surface exposed to combustion and therefore keeps much cooler.

(3) Since the combustion chamber is situated in a stationary member it is possible to apply a heat-insulated lining and so reap the benefit that this provides.

(4) The position of the injector is such that it can be well cooled and does not interfere in any way with the breathing capacity of the engine.

These are all very important advantages and the results obtained from fully developed engines of this type, under both test conditions and those of very prolonged and arduous service, have shown them to be very real.

The sleeve-valve C.I. engine is seen at its best in fairly large sizes, i.e. with cylinder diameters of 5 in. or over; it is less suitable for the smaller sizes of cylinder which are in most demand to-day because:

(1) Compared with the poppet-valve engine the leakage losses in the sleeve valve are greater. Since the leakage path is linear, it follows that if the dimensions of the cylinder are halved, the leakage path also is halved, but the volume is reduced to one-eighth. In the case of cylinder diameters of the order of 6 in. or over, the loss by leakage is insignificant, but when these dimensions are halved it assumes serious proportions, more especially in relation to cold-starting.

(2) When running idle the temperature of the exhaust is not sufficient to vaporize or burn off any lubricating oil that may have passed up the outside of the sleeves. It therefore accumulates in the exhaust ports or exhaust belt until the engine is put on to load when it appears as a burst of blue smoke. The actual amount of oil that may have so accumulated is insignificant, but only a very minute quantity will provide a puff of blue smoke. This objection is serious only in the case of road-vehicle engines which, of necessity, do a good deal of idle running and in which a smoky and smelly exhaust is particularly objectionable

On the other hand, the records of a number of sleeve-valve C.I. engines, which have been in regular service for from fifteen to twenty years in electric generating stations and pumping plants, have shown a sustained high efficiency and quite remarkably low maintenance costs.

CHAPTER VIII

Cold-starting of Compression-ignition Engines

The problem of starting compression-ignition engines from cold is at times a very serious one, more especially when no electrical or mechanical aids are available and reliance has to be placed on manual effort; it is to ensure reasonably easy starting that we are frequently compelled to employ a ratio of compression higher than would otherwise be desirable. Even so, conditions arise either of extreme cold, or of a heavily worn cylinder liner or leaky valves, when hand-starting, without some aid either to ignition or to gas sealing, becomes impossible.

Let us consider first the conditions which obtain when an engine is started from cold. In a compression-ignition engine we depend for ignition upon both the temperature and pressure of the compressed air in the combustion chamber, first to provide and then to ignite an envelope of vapour surrounding each droplet of fuel. In the first place the temperature must be high enough to exceed the self-ignition temperature of the fuel by a sufficient margin. In the second, the pressure must be high enough to ensure intimacy of contact and therefore rapid transfer of heat from the air to the surface of the liquid fuel. The time taken to develop ignition will depend upon the margin we can provide. If the margin be too narrow, then even though the temperature of the air be above the self-ignition temperature of the fuel, yet the time taken to develop ignition may be so long that the piston will have started to descend and the temperature to fall again before the desired result has been achieved.

At very low turning speeds the loss of heat to the cold walls of the cylinder during compression will of course be very great, added to which leakage past the piston rings or valves will play a highly important part, hence there will always be a minimum speed below which there will be no temperature margin at all, and a somewhat higher minimum at which the margin is insufficient to bring about ignition in the time available. Again, if a cold engine be turned at too high a speed, although the temperature and pressure margin will be widened, the time element may be too short and no ignition take place. Thus, for any C.I. engine there will be an optimum starting speed at which the compromise between the temperature and pressure margin on the one hand, and the time element on the other will be most favour-

able for cold-starting. Just what this optimum speed will be will depend upon:

(1) The surface/volume ratio and therefore the size of the cylinder, for upon this will depend the rate of loss of heat during compression.

(2) The intensity of air-swirl which will determine the rate of loss of heat by convection during the compression stroke.

(3) The physical condition as regards leakage.

In the case of relatively small engines of the order of 1 to 2 litres capacity per cylinder the optimum starting speed, when in good physical condition, will generally be found to be in the region of 200–300 r.p.m., provided that the moment of inertia of the flywheel is sufficient to maintain a fairly uniform angular velocity throughout the cycle.

From the point of view of starting from cold, it should be emphasized that it is not the mean rotational speed that matters, but rather the angular velocity during the last 60 or so degrees of compression, for it is during this period that most of the compression work is done and most of the temperature and pressure rise occurs. If the flywheel is relatively small it may well be that, at hand-starting speeds, the angular velocity during this critical period, when the negative work is at a maximum, is less than half that of the mean rotational speed, in which case the optimum starting r.p.m. will be correspondingly higher, and therefore far beyond the range of any hand-turning speed; hence for ease of starting by hand, the first essential is a really ample flywheel.

In any C.I. engine depending upon air-swirl and, more especially, in those depending upon compression-induced swirl, there will be zones in which the temperature of compression is higher or lower than the mean, hence from the point of view of cold-starting, it is desirable to direct the jet, or at least some portion of the jet, of fuel into the hottest zone. Fig. 8.1 shows a typical example of one of many readings obtained by means of a traversing thermocouple with the engine motored at hand-starting speed. Although the heat capacity of the thermocouple is as small as possible, none the less it cannot, of course, record the maximum temperature of compression, hence the temperature measurements shown on the graph must be regarded as of relative value only. From this traverse, as from many others, it will be seen that, as one would expect in any swirl chamber, the nearer the wall the lower the temperature. On the other hand, traverses taken through the centre of the chamber record a slightly lower temperature at the centre, the peak temperature being found at about one-quarter of the radius out from the geometric centre. Again, in order to obtain the most rapid transfer of heat from the air to the fuel, it is desirable to direct the fuel jet in opposition to the air movement, though for normal running it should be directed either at right-angles to or in the

same direction as the air movement. Lastly, in order to increase the chances of one or more droplets becoming inflamed when the margin of temperature is very narrow, it is desirable that the fuel should be pulverized as finely, and dispersed as widely, as possible. This again is inconsistent with the best running condition and, as usual, a compromise must be sought.

From the above considerations it will be evident that, *ceteris paribus*, the open-chamber direct-injection engine will give the easiest cold-starting, since it will have both the smallest surface/volume ratio and

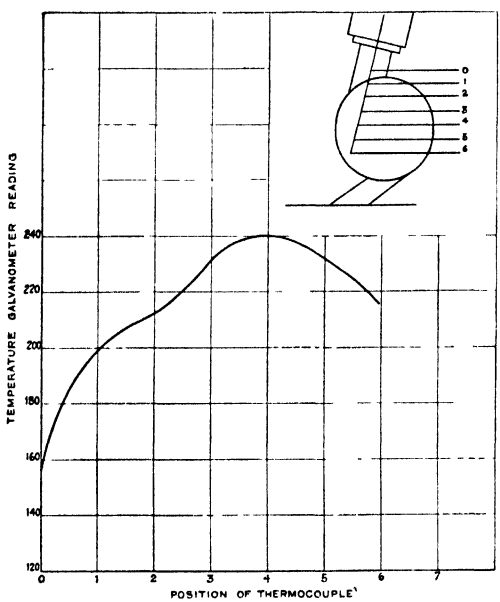

Fig. 8.1.—Temperature gradient as measured by traversing thermocouple in "Comet" combustion chamber

the lowest intensity of air-swirl, but, even so, conditions arise when, due either to extreme cold, low cetane fuel, or defective physical condition, it will be found impossible to start except with the help of some aid to ignition.

In all cases and with all types of combustion chamber the injection of an excess of fuel over and above that needed for full load will be found to help cold-starting and this is almost invariably provided for, as a matter of course. Of other aids to starting:

(1) The injection through the air inlet valve of a small quantity of lubricating oil or fuel oil is often of great assistance; the function of this is two-fold:

(*a*) By its bulk it raises temporarily the ratio of compression.

(*b*) It serves temporarily to seal both the piston-rings and valves.

Apart from its aid to starting, the injection of a little lubricating oil is sound practice in that it serves to wet the cylinder liner and so protect it from corrosion during the sensitive period when the wall temperature is well below the dew point of the corrosive combustion products and before the normal oil circulation has come fully into play. Thus it tends to reduce liner wear.

(2) The use, when electricity is available, of a glow plug in the combustion chamber so placed that the fringes, at least, of the fuel spray will impinge upon it.

(3) The use, when electricity is not available, of a smouldering cartridge, consisting usually of a small roll of blotting-paper, saturated with sodium nitrate, in place of the electric glow-plug. This may be lit externally and then inserted, in a suitable holder, into the combustion chamber, or alternatively it may be tipped with some material having a very low ignition temperature, which will ignite spontaneously at quite a low compression.

(4) By pre-heating the intake air either with a torch or by means of an electric heater in the induction pipe. To be effective, however, a very considerable amount of heating is required.

(5) By a pilot injection of fuel in advance of the normal injection, thus extending the time factor.

(6) By injection of fuel in a direction such as both to seek out the hottest zone and to be in opposition to the airstream; that is to say, by the use of the " Pintaux " injector, described in Chapter VII dealing with " Combustion-chamber Design ", or some similar device.

(7) By the use of a slow-burning cordite cartridge which will provide both the motive power required to turn the engine and the heat necessary to initiate combustion.

(8) By the admission of ether vapour which has both a very low ignition temperature and a very wide range of mixture strength.

(9) By the use of petrol and electric ignition at a reduced compression ratio.

The function of the first seven methods enumerated above is obvious, but that of (8) and (9) calls for some explanation. During a research on volatile liquid fuels carried out in the early 1920s in the author's laboratory, it was noted that ether not only had a very low self-ignition temperature but also a very wide range of mixture strength, more especially on the rich side. When tested in the author's variable-compression engine it was noted that it would self-ignite, before the passage of the spark, even at the lowest ratio of compression, viz. 3·8 : 1, while both the time of ignition and the rate of burning could be varied over a wide range by varying the strength of the ether-air mixture. When, a few years later, the problem of starting some relatively large experimental C.I. engines for tanks arose, an opportunity presented itself for turning this characteristic of ether to useful account,

for with the high ratio of compression, it could be relied upon to self-ignite even at the lowest ambient temperatures or speeds of rotation.

Clearly the easiest and, probably, the only practicable way of introducing such a volatile fuel as ether was by way of an externally carburetted mixture; equally clearly if a full charge of air and ether were admitted and burned at constant volume, the resultant peak pressure would be dangerously high, and probably premature. It appeared essential, therefore, to limit strictly the amount of oxygen which the engine could inhale at starting speeds. This was achieved by providing a very small and somewhat rudimentary ether carburettor through which only a minimum weight of air could pass. This carburettor was provided with a small but deep bowl, in place of the usual float chamber and a submerged diffuser jet. At starting the main air intake to the cylinders is closed completely and the engine can then inhale its charge only through the much restricted ether carburettor. Thus, owing to excessive throttling, it can inhale only a very reduced charge of, at first, very rich mixture, just sufficient, by its combustion, to run the engine at a low speed. As the level of the small quantity of ether in the bowl falls, so the mixture becomes progressively weakened until it approaches the chemically correct, with the result that the time of self-ignition advances. The combined effect of the warming-up of the piston, etc., and the progressive advance of ignition timing is gradually to speed up the engine; meanwhile the normal fuel is being injected, but at the low density and with little or no oxygen in the combustion chamber, it cannot burn. When after a few seconds the operator judges that the speed is sufficient for normal C.I. operation, he opens wide the main throttle valve, thus breaking the depression in the manifold, and so putting the ether carburettor out of action, when the engine should carry on normally. If he has done this prematurely and the engine does not run up at once to its governed speed, he has only to close the main air throttle when the ether carburettor will again come into operation and the engine will continue to run on ether till his next attempt.

This method of starting may appear cumbersome and elaborate, but there is much to be said for it. It was developed as a means for starting relatively large C.I. engines in the early days of their development and before electric starters of sufficient power to run them up to starting speed became available, was abandoned for many years, but was re-introduced during the war and became, and remains, a favourite method for C.I. engines in military service.

An interesting development that has evolved from this technique is that of the miniature so-called Diesel engines now so widely used for model aircraft, etc. These minute engines run on an externally carburetted ether/air mixture or a mixture of ether, lubricating oil, and some petroleum distillates, the oil to ensure gas sealing of the

very small and ringless pistons; the latter as thermal make-weights. Their whole functioning depends upon the self-ignition of the ether vapour, thus dispensing with electric ignition. Though described as Diesel engines, they operate with a pre-mixed charge and on the constant volume cycle, and are therefore much more akin to petrol engines. It is to the peculiar properties of ether, both as to its readiness to self-ignite and the controllability of its ignition point by varying the mixture strength, that their existence and success is due.

That it should be possible at all to start from cold, by compression ignition, an engine of only a few cubic-centimetres capacity is indeed remarkable. That it can be done, and that with considerable ease, is due solely to the peculiar characteristics of this fuel.

The method of starting by the use of petrol and a low compression has found favour in certain applications, more especially in the case of fishing-boat engines. In this case also a small carburettor is used to supply a mixture of petrol vapour and air to the cylinders which is ignited electrically by means of a spark-plug and magneto. The compression ratio is lowered by holding the main inlet valve open and using the inlet elbow, which is sealed off, as additional clearance volume, while the sparking-plug and a supplementary automatic inlet valve are both fitted in the inlet elbow passage. Thus under starting conditions quite a large engine can be turned easily by hand against a very low ratio of compression and, with a suitable carburettor and magneto, will start at a very low speed. The engine may then be run on petrol until the piston, exhaust valve, etc., are thoroughly warmed up, and subsequently turned over to C.I. operation by merely unsealing the inlet passage and bringing the main inlet valve into normal operation.

All the above aids for cold-starting are essential only under extreme conditions, but extreme conditions have sometimes to be faced, and, at all times, any aid to manual cranking is always welcome, while even with electric starting anything which will help to reduce the discharge from the battery is to the good.

The usual method of investigating cold-starting problems is to place the engine in a refrigerated chamber, freeze it down to a very low temperature and then record the time taken to achieve a start at some given turning speed. This practice is, however, very tedious; it takes many hours to bring the engine temperature down to the desired low level while either a single start or a failure to start after prolonged turning under conditions of very high internal friction will so raise the temperature of the engine as to require several hours of further refrigeration.

An alternative method, which the author has adopted, is to employ a relatively low ratio of compression and a fuel of normal distillation range and volatility but with a high ignition temperature (low cetane number) such that, at normal room temperatures, no ignition will take

place. The engine, which must be provided with a very large flywheel in order both to ensure reasonably uniform cyclical regularity even down to the lowest turning speeds and to prevent rapid acceleration when ignition occurs, is kept motoring continuously at any desired low speed with the injection pump plunger held out of engagement with its cam. The temperature both of the intake air and of the jacket water is raised progressively and, at intervals, the pump plunger is engaged for three or four successive cycles only; this procedure is repeated as the air and water temperature rises until ignition occurs. Provided the necessary precautions are taken, this method has been found to give excellent

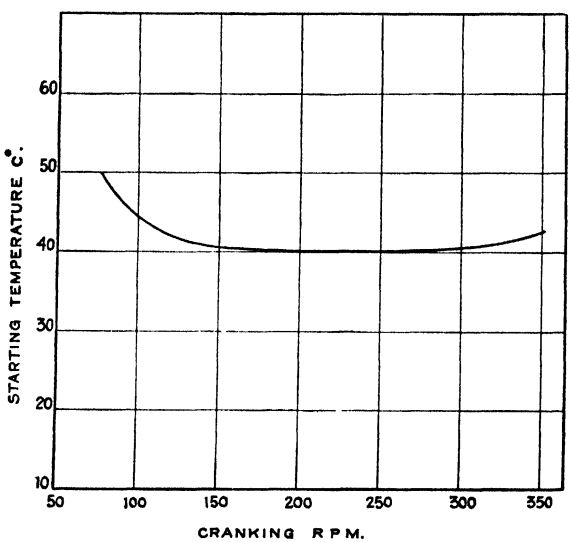

Fig. 8.2.—Effect of cranking speed on starting when using 18 cetane fuel

consistency and repeatability, so much so that under any given set of conditions a variation of only 2° C. in the air and water temperature is sufficient to define whether ignition will take place with certainty or not at all. It is thus possible to reach very quickly the borderline state between ignition and no ignition and to study, at leisure, and by oft-repeated tests, the conditions which obtain at that critical point, and thus to take in one hour, and under comfortable conditions, as many readings and observations as could be obtained in a cold chamber in a month. By such means it is possible to explore quickly and accurately such factors as, for example, the effect of turning speed, of fuels of differing cetane number, of different injectors, of different rates or times of injection, different ratios of compression, the effect of supercharging, and indeed of almost all the factors that influence cold-starting.

Figs. 8.2–8.8 show typical observations taken from this starting rig when fitted with a " Comet Mark III " combustion chamber. In all

cases the variable quantity is the temperature of the air and cooling water, and in all cases the " startability " is expressed in terms of this temperature.

Fig. 8.2 shows the effect on starting of varying the cranking speed over the range 70 to 350 r.p.m., from which it will be noted that the optimum cold-starting speed for this engine is in the region of 200–250 r.p.m.

Fig. 8.3 shows the effect on starting of an overdose of fuel. The normal full-load injection rate for this engine is 85 mm.^{3} per cycle, at

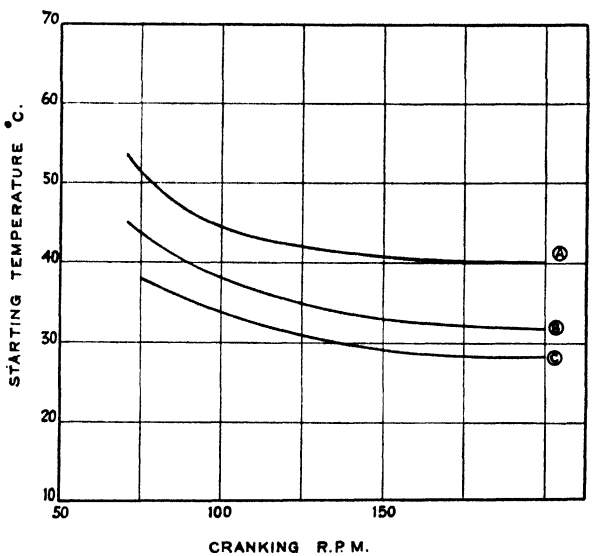

Fig. 8.3.—Comparative starting temperatures with various quantities of fuel injected

(A) 85 mm.^{3} per injection (normal fuel load).
(B) 128 mm.^{3} per injection.
(C) 170 mm.^{3} per injection.

which rate a B.M.E.P. of 100 lb. per sq. in. is developed at 1500 r.p.m., thus the overdoses shown at B and C correspond to 50 and 100 per cent respectively.

Fig. 8·4 shows the effect upon starting of two different rates of fuel injection each at the appropriate timing.

Fig. 8.5 shows the effect on starting of the " Pintaux " injector whose function is to deliver, at starting speeds, a jet of fuel directed through the hottest zone of the combustion chamber and in a direction in opposition to the air-swirl.

Fig. 8·6 shows the effect upon cold-starting of two different compression ratios, viz. 14 : 1 and 16·6 : 1. It is interesting to note that the effect of the higher compression ratio is almost exactly the same as that of the " Pintaux " injector at the lower ratio.

Fig. 8·7 shows the influence on cold-starting of fuels of similar volatility but of widely different cetane number.

Fig. 8·8 shows the influence of supercharging. In this case it should

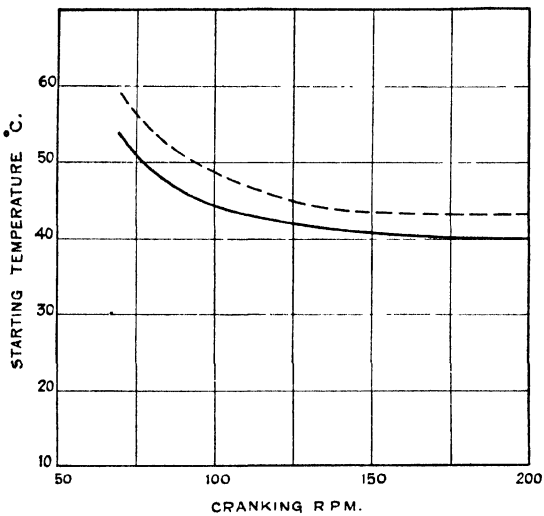

Fig. 8.4.—Comparative starting temperatures with various rates of fuel injection
——— Normal rate of 3·6 mm.³/crank°/litre. Static injection timing, 23° E.
— — — Low rate of 2·28 mm.³/crank°/litre. Static injection timing, 28° E.

be noted that the effect is one of pressure alone, for in all cases the temperature of the supercharge air was controlled in exactly the same manner as when running normally aspirated. It is interesting to note

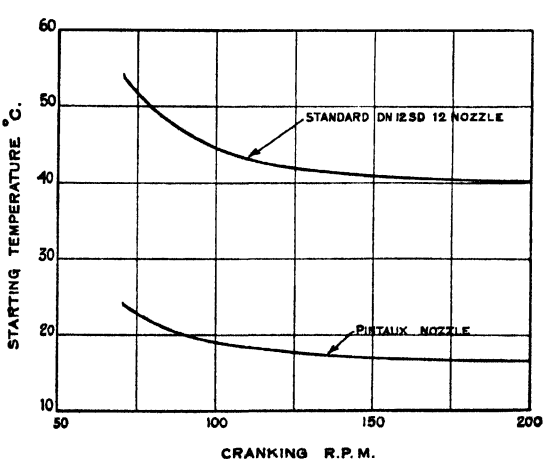

Fig. 8.5.—Comparison between standard and "Pintaux nozzle" (18 cetane fuel)

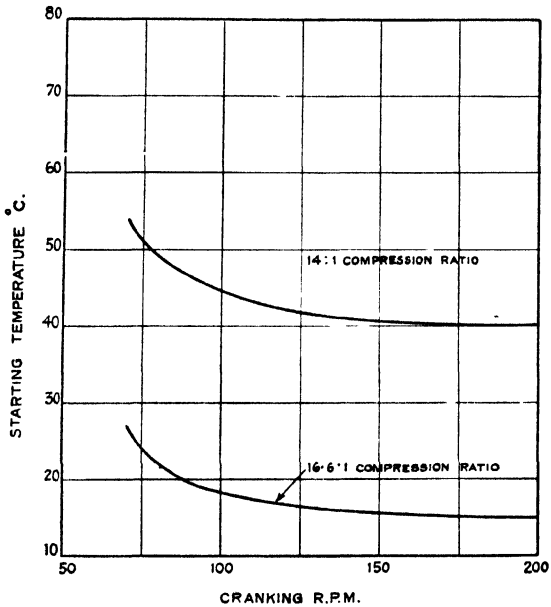

Fig. 8.6.—Effect of compression ratio on starting when using 30 cetane fuel

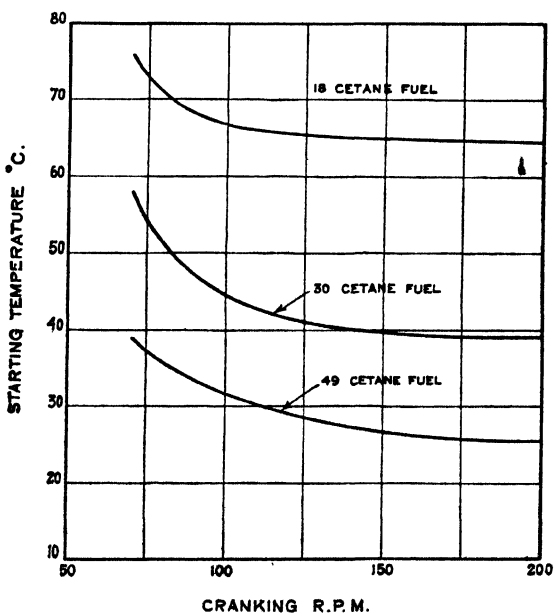

Fig. 8.7.—Comparative starting temperatures with fuels of different cetane numbers (compression ratio 14 : 1)

that the effect of the supercharge is most prominent at the very low speeds due to the lower relative heat losses at the higher density.

From consideration of the factors controlling starting from cold it might reasonably be expected that under the borderline condition only a small proportion of the droplets, viz. those that had reached and stayed for longest in the hottest zone, would ignite, and that ignition would spread so slowly from one to another as to be far from complete even at the end of the expansion stroke. In such an event the indicator diagram would show no clearly defined rise of pressure but only a general swelling of, or a hump in, the expansion line.

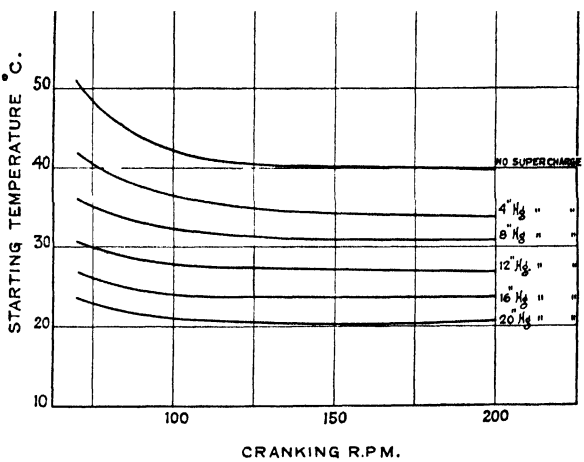

Fig. 8.8.—Effect of supercharging on starting when using 18 cetane fuel (compression ratio 14 : 1)

It was, to the author, somewhat surprising to find that this never occurred. After observing some hundreds of starts under conditions when it was just touch and go whether ignition would occur or not, the indicator diagram revealed invariably either no ignition at all, or complete ignition, as exemplified by an extremely rapid rise of pressure. In fact the starting diagram, if ignition occurred at all, resembled the normal full-load diagram, except that the delay period was somewhat more prolonged and the rate of rise of pressure following the delay was steeper.

Under such border-line and unstable conditions it would frequently be found that ignition would take place on the first or second cycle but not on the third, due, presumably, to slight dilution of the air by residual exhaust gases equivalent, in effect, to a slight reduction in density, while the residual heat generated by combustion during one cycle only was not sufficient to compensate for this effect.

As illustrating the extremely narrow range of this borderline con-

dition it was observed that under any given set of conditions a variation of only 2° C. in the ambient temperature was sufficient to decide whether the engine would start with certainty or fail to show any sign of ignition at all.

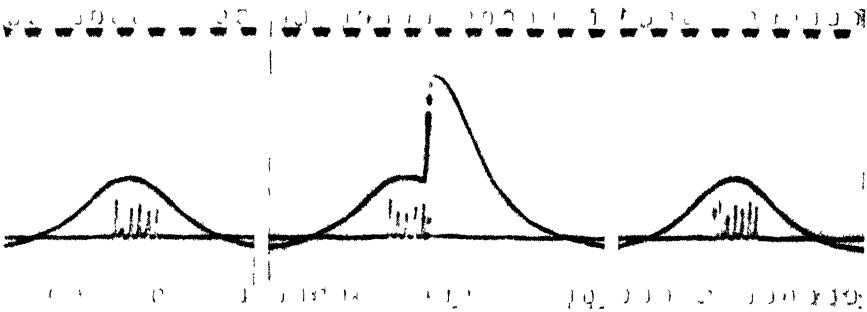

Fig. 8.9.—Starting test, 100 r.p m.
Water temperature, 45° C. Induction temperature, 45° C.

Fig. 8.9 shows a photographic record of a typical starting diagram taken under conditions when it is just touch and go. It will be noted that no ignition took place on the first or third cycle but that on the

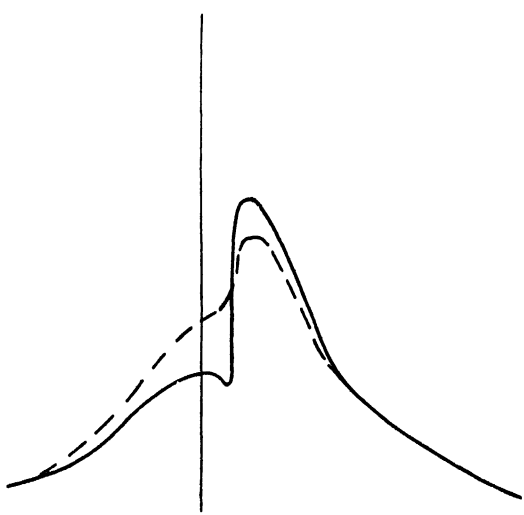

Fig. 8.10.—Comparative diagrams at starting speed and at 1500 r.p.m. with full load
——— 100 r.p.m. starting at 100 per cent excess fuel.
– – – – 1500 r.p.m. full load.

second cycle ignition occurred just before the end of the injection period. From the very steep and rapid rise of pressure it is evident that the bulk of the injected fuel must have been inflamed almost

simultaneously, while there is little evidence of any delayed or after-burning.

Fig. 8.10 shows—superimposed—a typical starting diagram at 100 r.p.m. and a normal full-load running diagram taken at 1500 r.p.m. on the same fuel and at the same low compression ratio. In the latter case the compression pressure is much higher due, in part, to the high temperature of the heat-insulated member, piston, etc., and, in part, to the lower relative heat losses at the higher speed.

CHAPTER IX

Mechanical Efficiency

In the design of any form of heat engine our first objective must be to convert the highest possible proportion of the potential heat energy of the fuel into useful work, not only on the obvious grounds of fuel economy and power output, but also because the greater the proportion of heat converted into useful work, the less will remain to give trouble in the way of over-heated exhaust valves, stuck piston-rings, and all the usual troubles which we associate with excessive heat flow.

It will avail us nothing, however, if in striving to achieve the highest possible thermal efficiency we lose, by increased internal friction or air-pumping work, all that we have gained by improved thermodynamic conditions. It is of the utmost importance therefore that we should reduce to the absolute minimum the various sources of loss between the crown of the piston and the flywheel. We must bear in mind, too, that by far the majority of high-speed internal-combustion engines find their scope in road transport, and that road transport service demands a very wide range of speed while the prevailing conditions are those of a low torque (usually averaging from 25 to 35 per cent of the maximum) at a fairly high engine speed, conditions under which the mechanical losses bulk very large indeed.

In this field more especially, the designer is faced with conflicting and largely irreconcilable demands. Durability calls for large bearing surfaces; silence, for long pistons and close clearances; safety, for large-diameter crankshafts and so on, all of which tend to pile up alarmingly the frictional losses. The designer is therefore plunged into a sea of compromise, from which no rules or arithmetic can save him. He must rely for the most part upon cumulative experience and his own judgment. Again, in the author's experience, mechanical friction losses are extraordinarily difficult to track down and have a way of varying as between one engine and another in a manner which is extremely difficult to account for.

Measurement of Mechanical Efficiency

To be in a position to assess the mechanical efficiency we must, as a first stage, arrive at the indicated mean pressure; but this is not always easy. We can measure the brake mean effective pressure quite accu-

rately from direct dynamometer tests, but no indicator has yet been developed that will give even a reasonably accurate measure of the indicated mean pressure of an engine running at high speed. The best of modern indicators can be relied upon to give a fairly accurate record of the pressure changes throughout the cycle, and, from the point of view of studying combustion, this is all we need, but none can be relied upon to maintain a phase relationship of sufficient accuracy or consistency to permit of an accurate measurement of the mean effective pressure. Moreover, the problem is becoming progressively more difficult as the peak pressures increase for, when plotted on a piston displacement basis, the main pressure changes, which occur round about the dead centre, result in the high-pressure portion of the diagram being so crowded into the region of the inner dead centre that a phase error of only one degree may vary the area of the diagram by as much as 5 per cent or even more. We have to fall back therefore on either motoring tests, or what is generally known as the *Morse test,* as a means of determining the total mechanical losses, and from there, by addition, the indicated mean pressure. In the case of compression-ignition engines we can arrive at an approximate measure of the mechanical losses by projecting the curve of gross fuel consumption against brake mean pressure back to the point of zero fuel.

Of these methods, the motoring test, if carried out as nearly as possible under running conditions, gives a nearly true measure of the total mechanical and fluid pumping losses, but is liable to err on the high side, and to err badly on the high side in the case of very high-compression engines.

The Morse test, which is applicable only to multi-cylinder engines, consists in running the engine on the dynamometer until all conditions are stabilized, then cutting out one cylinder at a time and measuring the fall in torque while maintaining the same r.p.m. The observed difference in torque is then proportional to the indicated mean pressure of the cylinder which is out of operation. This method gives a fairly reliable measure of the indicated mean pressure so long as the cutting out of one cylinder does not affect the performance of the remainder. Most multi-cylinder engines, however, have common exhaust manifolds, and the cutting out of any one cylinder must disturb the sequence of the exhaust impulses, and so may affect, for good or ill, the charging efficiency of the other cylinders. Since the reading depends upon the absolute measurement of a comparatively small difference, a very slight change in the volumetric efficiency of the majority of the cylinders will have a large influence on the differential reading. On the whole, however, the Morse test appears to be a fairly reliable one so long as the engine is not too sensitive to exhaust pulsations, that is to say, so long as it has not any excessive valve overlap, and the exhaust is unrestricted.

The third method, namely, projecting the Willans line of gross fuel

consumption down to zero fuel is, of course, applicable only to compression-ignition engines. Its weakness lies in the fact that the Willans line is not quite straight but turns up slightly at the weak end and considerably at the rich end, due to imperfect combustion; there is usually, however, a sufficient length of straight line over the middle range to allow of a reasonably accurate projection. Fig. 9.1 shows the

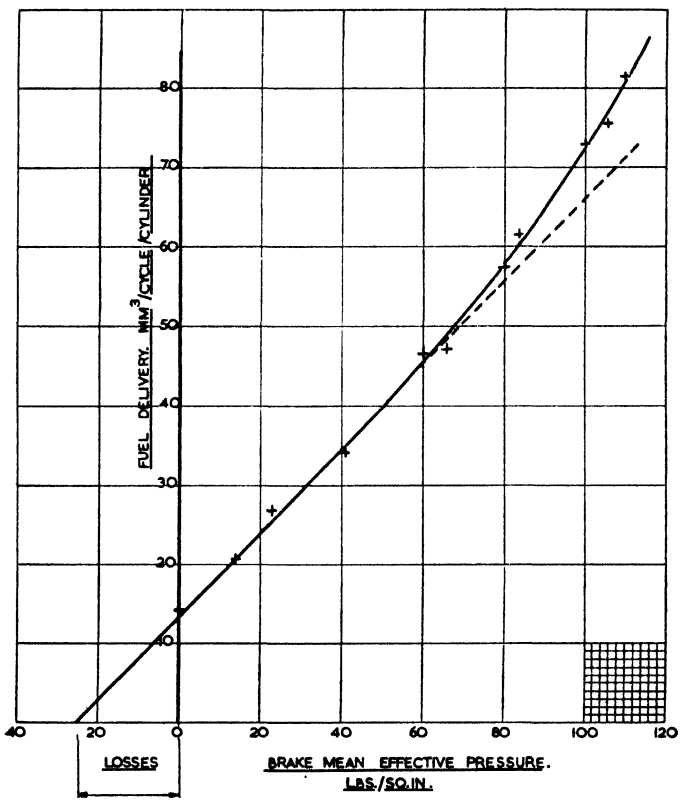

Fig. 9.1.—Mechanical efficiency as measured by Willans line method
Six-cylinder compression-ignition engine at 1600 r.p.m.

results of a typical test taken from a six-cylinder C.I. engine at 1600 r.p.m. The engine in question was of the swirl-chamber type which gives a more nearly straight line relation between gross fuel consumption and power than does the direct-injection engine.

Since the motoring test is the one most frequently used and, when an electric dynamometer is employed, is much the quickest and simplest, it is worth while to discuss this in more detail.

It is customary, and certainly convenient, to express the frictional and other losses as revealed by motoring or other tests, in terms of

their equivalent mean effective pressure. It cannot be contended, of course, that either the purely frictional losses or the air-pumping work are the same when the engine is motored as when running under power, but in the case of a low compression, say 6·0 : 1 or less, the increase in air work when motoring just about balances the reduction in friction loss, with the result that the estimate of total losses, both frictional and air-pumping combined, is usually correct to within plus or minus 5 per cent. Thus fig. 9.2 shows two superimposed light-

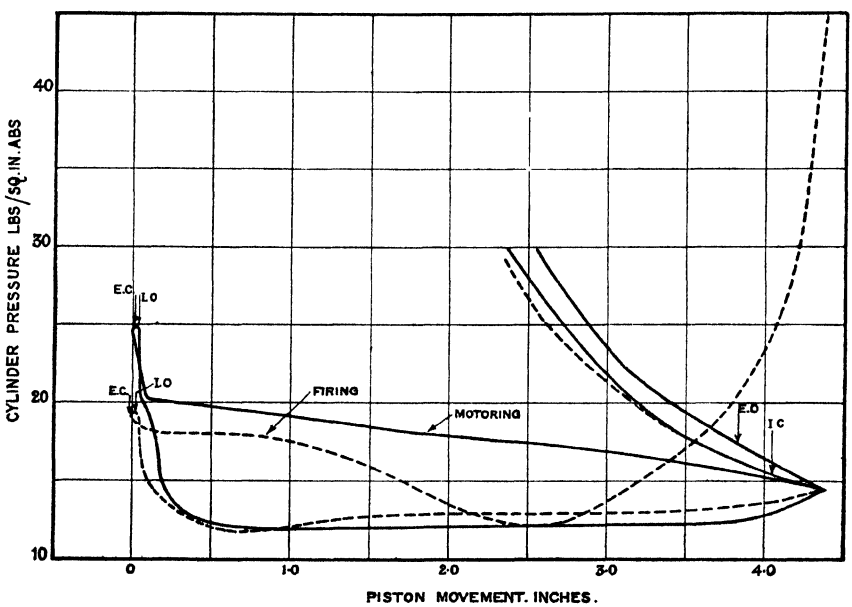

Fig. 9.2.—Light-spring diagrams at 1600 r.p.m.

Test conditions: C.R. 6 : 1. Jacket temperature, 100° C
Inlet and exhaust pipes in position

spring diagrams, the full line when motoring and the dotted line when firing. In the latter case the exhaust back pressure is considerably reduced due to the kinetic energy set up by the discharge of exhaust at high pressure. In this typical example the air work in emptying and filling the cylinder amounts to the equivalent of 5·0 lb. per sq. in. B.M.E.P. when motoring, and 4·2 lb. per sq. in. when running under power. With an average mechanical efficiency of 80 per cent, the estimate of indicated mean pressure should therefore be accurate to within plus or minus one per cent, which is near enough for all practical purposes, but this applies only to engines with a relatively low ratio of compression.

In the case of very high-compression engines the motoring method

will over-estimate the total losses by, in some cases, as much as 15 to 20 per cent, due to excessive negative work caused by loss of heat to the cylinder walls during the compression/expansion strokes, a loss which is largely fictitious in that most of it has already been taken account of and discounted in the brake power reading. Moreover, the internal temperature conditions as between motoring and running under power are so widely different, more especially when a heat-insulated member is fitted in the combustion chamber, that the conditions may even be reversed and, when running under power, heat be picked up rather than lost during most, if not the whole, of the compression stroke. We cannot unfortunately measure the area of the negative compression/expansion loop from indicator diagrams, for this depends on very exact phasing. We can arrive at it only very approximately by various indirect observations, or by a process of elimination. The area of the compression/expansion loop will vary also both with cylinder size and revolution speed, but since smaller engines usually run at higher average speeds, these two factors tend to cancel out. In the case of petrol engines it usually amounts to about 1 lb. per sq. in. mean pressure at a compression ratio of 4 : 1, rising to about 2·0 lb. per sq. in. at 7·0 : 1. In the former case it probably barely offsets the additional friction loss when running under power; in the latter it probably rather more than offsets it.

For compression-ignition engines, however, with compression ratios of the order of 15 to 18 : 1, the compression/expansion heat loss may range from 5 or 6 up to as much as 8 lb. per sq. in. or even over, when a very high air-swirl is employed, but since this is largely a fictitious figure and one which far more than offsets the increased friction when running under power, much of it should be deducted from the observed motoring figure. Just how much is necessarily a matter of guess-work, but general experience indicates that in the case of open-chamber low-swirl engines about 2 lb. per sq. in. should be deducted from the observed motoring losses and in that of compression-swirl engines, usually with a slightly higher ratio of compression and a much more intense air-swirl, about 5 lb. per sq. in. should be deducted.

Taken by and large, it would seem that, in so far as spark-ignition engines are concerned, the motoring losses may be taken as a nearly true measure of the combined mechanical and fluid-pumping losses under running conditions, but that in the case of compression-ignition engines, from 2 to 5 lb. per sq. in., depending upon the size and type of engine, should be deducted from the observed reading when motoring.

Components of Mechanical Losses

Once we have arrived at what we believe to be a reasonably true estimate of the total mechanical and fluid-pumping losses, the next

step is to endeavour to separate them out with a view to pinning down and tackling the chief offenders.

In the first place the air work involved in emptying and filling the cylinder, when running under power, can be arrived at by light-spring indicator diagrams, for here, since the pressure changes are relatively small and well spread out over the time scale, quite large errors in phasing will have only an insignificant effect on the area on the diagram.

After having evaluated the air-pumping work, and estimated the negative work due to heat loss during the compression/expansion stroke when motoring, all that remains is represented by purely mechanical or viscous friction, and the power absorbed by such auxiliaries as are essential to the functioning of the engine. The latter, of course, can be assessed independently and quite accurately by direct dynamometer measurement. There remains then the friction of the pistons, crankshaft, valve mechanism, etc. Almost invariably it will be found that the pistons constitute both the largest item and the most difficult to assess because both temperature and pressure play so large a part in determining their friction. Temperature controls the viscosity of the oil film between the piston and the cylinder walls, and pressure both the side-thrust against the cylinder walls and the radial loading of the piston-rings, for unless the gas pressure is allowed to build up behind a piston-ring, it will not seal but will collapse radially. The matter is complicated yet further by the fact that the lubrication of the piston and its rings alternates between something approaching boundary conditions when it is hovering at either end of its stroke, to probably full fluid lubrication when in mid-career, so that its coefficient of friction is subject to wide cyclical variation.

It is improbable that the relatively small difference in side-thrust as between running under power and motoring has any appreciable influence upon the friction, because in a high-speed engine the inertia of the pistons results in considerable side-thrust at every stroke, while the additional gas pressure when running under power and exerted only during one stroke in every four, adds but little to the mean side-thrust throughout the whole cycle.

It is undoubted, however, that the gas loading behind the rings has a very important influence. From indicator diagrams taken from the back of piston-rings (in this case from the junk-head rings of a sleeve-valve engine) it was found that the gas pressure behind the first gas ring followed that in the combustion chamber very closely, and that if prevented from doing so, the ring would invariably collapse and blow by. The pressure recorded behind the second and third gas rings was, of course, very much lower, and with less cyclical variation, but none the less considerable by comparison with the normal radial spring pressure of the rings. Some attempts made to measure the friction of

piston-rings in a high-speed compression-ignition engine of $4\frac{3}{4}$ in. bore and running at 1500 r.p.m. indicate that under full-load conditions, with a compression pressure of 550 lb. per sq. in. and a maximum peak pressure of 800 lb. per sq. in., the friction of the first gas ring was equivalent to between 2·5 and 3·0 lb. per sq. in. mean pressure; that of the second ring to between 1 and 1·5 lb. per sq. in. and that of the third to between 0·5 and 1 lb. per sq. in., while the oil scraper ring accounted for about 0·5 lb. per sq. in. Thus the complete ring assembly accounted under full-load running conditions for between 4·5 and 6 lb. per sq. in. mean pressure. The same ring assembly, when motored with the cylinder heads removed and therefore unloaded by gas pressure, accounted for approximately 1·5 lb. per sq. in. M.E.P. The above figures must be regarded as very approximate only, but their order of magnitude has been confirmed by other tests on a special piston-testing rig. They apply to a compression-ignition engine in which, owing to the very high compression ratio, the period of high gas pressure is relatively long sustained. In the case of a spark-ignition engine, the mean gas loading behind the rings will be much less, and the friction due to gas loading probably little more than half that in the compression-ignition engine.

We shall not be far wrong if we assume that the increase in piston-ring friction as between motoring, when the rings are subject to the compression pressure only, and when running under full power, is of the order of 2·0 to 2·5 lb. per sq. in. mean pressure in the case of compression-ignition engines, and of about 1·5 lb. per sq. in. in that of spark-ignition engines.

We must next consider the friction of the piston itself independently of the rings. This will depend both upon the weight of the piston (including, of course, that of the small end of the connecting-rod and gudgeon-pin) and upon the area of bearing surface against the cylinder walls. The weight of the piston will decide the magnitude of the side-thrust against the cylinder, since the thrust due to the inertia forces is the dominating factor; hence the lighter the piston, the lower the friction due to side-thrust, and that in very nearly direct proportion for, as mentioned already, at high speeds the gas pressure adds but little to the mean side-thrust throughout the cycle. The area of bearing surface determines the area of oil film in shear, and it is the resistance of the oil film in shear that accounts for a large, probably the major, proportion of the piston friction. Unfortunately, under the prevailing conditions, the resistance to shear or viscous friction tends to increase with increase of speed and, at high engine speeds, may reach a high figure, depending of course upon the temperature and corresponding viscosity of the oil. It depends to some small extent also upon the working clearance. We cannot really, of course, dissociate the friction due to side-thrust from that of viscous friction, for the two interact

upon one another but the latter appears to be the dominating factor. We can reduce piston friction very considerably by using short and cut-away skirts of the slipper type with fairly liberal clearances, but only at the expense of silence and good oil control. The higher the compression and working pressures, both the more violent the piston slap and the more oil we must circulate through the bearings and from thence to the cylinder walls, so that the further we progress in these directions, the more does the piston design become a question of compromise.

Of the various factors, therefore, that make up the sum total of piston friction, viscous friction appears to be very important; it increases rapidly with speed, but is nearly independent of the gas loading; of equal importance is piston-ring friction which is nearly independent of speed but nearly proportional to gas pressure.

The next largest item is the friction of the crankshaft in its bearings. Here the conditions are those of full fluid lubrication with a very low coefficient of friction, but here again viscous friction plays a highly important part, with the result that the magnitude of the crankshaft friction is a function of rubbing velocity rather than pressure loading. The other items such as valve mechanism and auxiliary drives usually count for very little, while, of the auxiliaries essential to the functioning of the engine, i.e. apart from such items as a dynamo, fan, or vacuum pump, only the water-circulating pump absorbs any appreciable amount of power, but this seldom amounts to as much as 1·0 lb. per sq. in.

There is reason to believe that of the various items that make up the total air-pumping and friction losses, the difference between the motoring assessment and the actual value when running under full power will be substantially as follows:

1. *Air Pumping.* The motoring measurement will tend to overstate this, because there will be no kinetic energy available in the exhaust to help in emptying the cylinder. Such over-statement will generally be of the order of 1 to 1·5 lb. per sq. in.

2. *Piston Friction.* The motoring measurement will be an under-statement because the piston-rings will be loaded only by the compression pressure; against this, however, the viscous friction under running conditions will be somewhat lower owing to the higher piston temperature but this, in turn, will be offset by the greater mean side-thrust. On balance, the motoring measurement will be an under-statement to the extent of from 1·5 to 3·0 lb. per sq. in. depending upon the number of piston-rings and on the working pressure.

3. *Crankshaft, including Connecting-rod and Big-end Bearings.* The motoring measurement will be a slight under-statement to the extent of probably about 1 lb. per sq. in.

4. *Other Mechanical Items.* The motoring measurement should be a true statement.

5. *Compression Expansion.* This, as explained earlier, is really a fictitious item which may amount to anything from about 1·0 lb. per sq. in. in the case of a low-compression spark-ignition engine, to as much as 8 lb. per sq. in. in the case of a small, very high-compression, high air-swirl, compression-ignition engine.

It would appear then that in the case of a low-compression engine, the various under- and over-estimates of the motoring test just about cancel each other out. There is in fact abundant evidence of an indirect, but none the less reliable, nature to confirm that at compression ratios in the region of 5 or 6 : 1, the motoring test, if carried out carefully and as nearly as possible under running conditions as to temperature, does give a fairly true measure of the combined fluid pumping and frictional losses, but that at the higher compression ratios, it overstates them considerably.

Comparison of Mechanical Losses of Petrol and Compression-ignition Engines

Let us consider the case of two typical modern eight-litre six-cylinder engines, each of generally similar design, both having seven-bearing crankshafts, and both of the same cylinder dimensions:

(*a*) A petrol engine with a compression ratio of 6·0 : 1.

(*b*) A high air-swirl compression-ignition engine with a compression ratio of 16·0 : 1.

In so far as mechanical efficiency is concerned, the only significant differences between these two engines are:

	(*a*)	(*b*)
(1) Crankshaft diameter (ratio)	1	1·2
(2) Total bearing length (ratio)	1	1·1
(3) Weight of reciprocating parts	1	1·4
(4) Piston-ring assembly	2 pressure 2 oil control	3 pressure 2 oil control
(5) Auxiliaries	Oil and water pumps (coil ignition)	Oil, water, and fuel injection pumps

When brake-tested with a swinging-field dynamometer, engine (*a*) developed at 1600 r.p.m. a brake mean pressure of 130 lb. per sq. in. and engine (*b*) a brake mean pressure of 118 lb. per sq. in. at the same r.p.m. and at the point when the exhaust became just visible. When motored at the same speed and at the same oil and water temperatures, engine (*a*) registered a motoring loss of 18 lb. per sq. in. and engine (*b*) a loss of 29 lb. per sq. in.

By Morse test engine (*a*) showed a difference between brake and indicated mean pressure of 19 lb. per sq. in., and engine (*b*) a difference of 28 lb. per sq. in. By projecting the Willans line, engine (*b*) showed the total mechanical and other losses to be 25 lb. per sq. in.

Since both engines had common exhaust manifolding, the Morse test, though it agreed fairly well with the motoring test, was considered to be the less reliable of the two.

In the case of engine (*b*), it was estimated, from past experience, that the fictitious compression/expansion loop and other factors just considered would result in the motoring test over-estimating to the

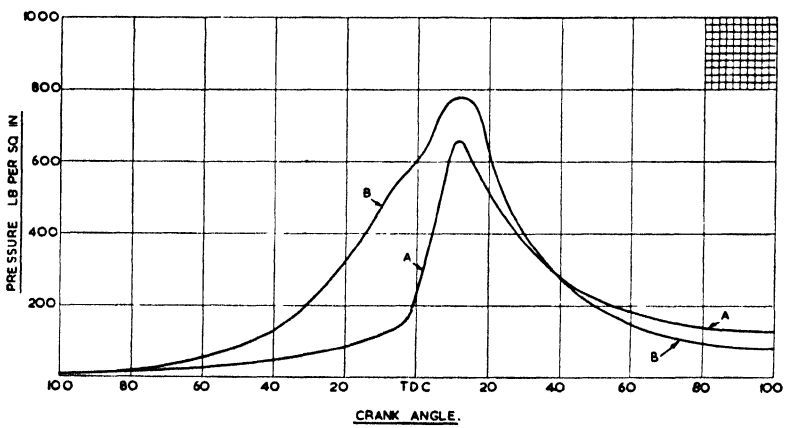

Fig. 9.3.—Comparative full-load indicator diagrams
(A) Petrol engine, C.R. 6·0 : 1.
(B) Compression-ignition engine, C.R. 16·0 : 1.

extent of between 4 and 5 lb. per sq. in., and since the former figure agreed with the Willans line test of 25 lb. per sq. in. this was accepted as probably correct.

Accepting these figures the indicated mean pressure of engine (*a*) becomes 130 + 18 = 148 lb. per sq. in. and that of engine (*b*) 118 + 25 = 143 lb. per sq. in. and their respective mechanical efficiency 87·8 and 82·5 per cent at 1600 r.p.m. The comparative full-load indicator diagrams are shown in fig. 9.3, from which it will be seen that while there is no very great difference between the maximum peak pressures, that of the petrol engine is very short lived. If, however, we compare, in each case, the time during which the working parts are subjected to high pressure, the difference is indeed very marked.

Light-spring indicator diagrams showed that the indicated air work in emptying and filling the cylinders when running on full load amounted to 3·5 lb. per sq. in. in both cases, leaving 14·5 lb. and 21·5 lb. per sq. in. as the purely mechanical losses. Both engines were then progressively undressed and their component parts motored inde-

pendently as nearly as possible at their normal running temperatures. After making allowance for the difference between motoring and running friction, it was concluded that the frictional losses of each could be subdivided as follows:

	Engine (a)	*Engine (b)*
Indicated air-pumping work	3·5	3·5
Oil, water, and fuel injection pumps ..	1·0	1·5
Valve mechanism and auxiliary drive	1·5	1·5
Crankshaft and connecting-rod bearings	4·0	6·0
Pistons and rings	8·0	12·5
	18·0	25·0

Let us next consider the conditions which prevail when both engines are running still at the same r.p.m. but at 30 per cent of full torque. The brake mean pressures will then be 39 and 35·4 lb. per sq. in. respectively.

In the case of the petrol engine the air supply will be throttled and, owing to the much lower gas pressures, there will have been a considerable re-orientation of the individual losses which will now probably be somewhat as follows:

	Full load	*30 per cent load*
Indicated air-pumping work	3·5	6·0
Valve mechanism and auxiliaries	2·5	2·5
Crankshaft	4·0	3·5
Pistons and rings	8·0	7·0
	18·0	19·0

The motoring figure with the throttle set in the position to give a B.M.E.P. of 39 lb. per sq. in. is increased by about 1 lb. per sq. in., because partial throttling increases the air-pumping work to an extent which more than offsets the reduction in friction due to the lower gas pressures. Thus in this case the indicated mean pressure becomes $39 + 19 = 58$ lb. per sq. in. and the mechanical efficiency 67·2 per cent.

In the case of the C.I. engine, since the only difference between full and partial load lies in the setting of the fuel-injection pump, the indicated air-pumping work remains exactly the same and, since the compression pressure is the same, and the peak pressure very nearly as high at light as at full load, there is little to change either the total or the respective allocations of the mechanical losses, which may again be taken as 25 lb. per sq. in. The indicated mean pressure then becomes $35·4 + 25 = 60·4$ lb. per sq. in. and the mechanical efficiency 58·6 per cent.

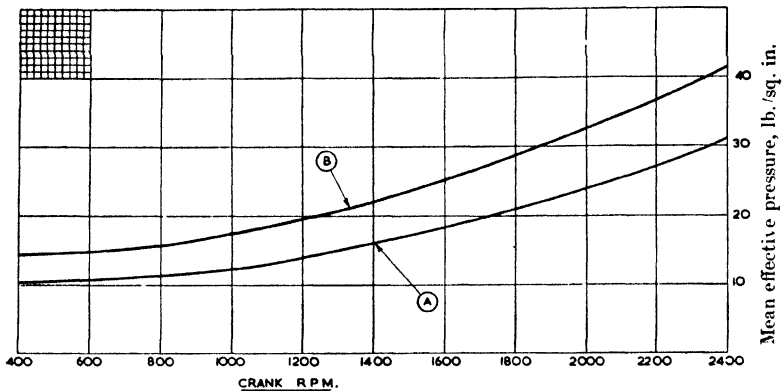

Fig. 9.4.—Total mechanical and other losses in terms of mean effective pressure under running conditions over speed range 600–2400 r.p.m. 6-cylinder, 8-litre engine

(A) Petrol engine, C.R. 6·0 : 1.
(B) Compression-ignition engine, C.R. 16·0 : 1.

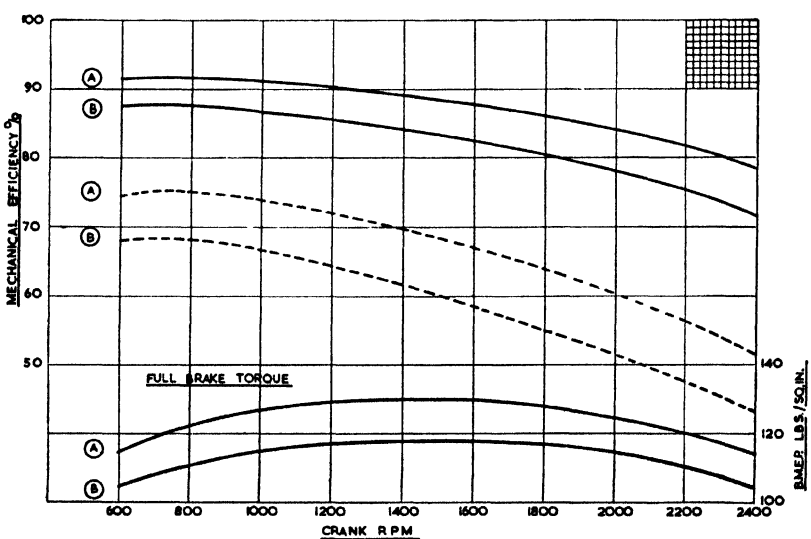

Fig. 9.5.—Mechanical efficiency over speed range at full and 30 per cent full torque. 6-cylinder, 8-litre engine

(Figures based on total mechanical and other losses given in fig. 9.4)

(A) Petrol engine, C.R. 6·0 : 1.
(B) Compression-ignition engine, C.R. 16·0 : 1.

——— Full torque.
- - - - 30% Full torque.

Thus far we have considered the conditions which obtain at one speed only, viz. 1600 r.p.m. As we go up the speed range, some of the items of loss will be found to increase rapidly, even in terms of torque or M.E.P. For example, viscous friction which represents quite a considerable item tends under practical working conditions to increase with speed. The dynamic forces, due to the inertia, of the moving parts, will increase also as the square of the speed, and the proportion of the total friction due to them will be on an ascending scale. Again the indicated air work per cycle in emptying and filling the cylinders will increase due to wire-drawing through the valves and so on; much the same applies also to the power absorbed by the water-circulating pump. Thus the curve of total mechanical loss expressed in terms of equivalent mean pressure against speed is a rising one. Fig. 9.4 shows the curves for the two engines in question over the speed range 600–2400 r.p.m., and fig. 9.5 the corresponding mechanical efficiency at both full and 30 per cent of full torque.

When it is borne in mind that by far the bulk of all high-speed internal-combustion engines are employed for the propulsion of road transport, and that the prevailing operating condition is that of high speed and low torque, the supreme importance of cutting internal friction losses down to the very minimum will be appreciated. In other fields, such for example as marine work, it is of less importance, for a marine engine cannot be called upon to operate at high speed and low torque, and the same applies to aircraft engines, though even more so, since it is usual to maintain a high torque at all speeds by the appropriate use of the variable-pitch propeller.

Effect of Gas Pressure on Mechanical Efficiency in Spark-ignition Engines

In the case of spark-ignition engines, as the compression ratio is raised, so both the compression and the peak pressures are increased in like proportion, or very nearly so, and the whole pressure scale during the working strokes is raised. This has a twofold effect. Firstly the higher pressures in themselves involve heavier loadings and greater friction, more especially piston-ring friction. Secondly, and much more important, the higher pressures call for heavier moving parts, larger-diameter crankshafts, and larger bearing surfaces, if the same margin of safety and the same degree of durability are to be maintained, thus adding greatly to the sum of the total friction losses.

Only mass experience over a long period can determine just what additional scantlings or bearing surfaces are required in order to maintain the same margin of safety or durability, but that the increase in internal friction with increase of compression is a very formidable one there can be no doubt. As a broad generalization, the maximum pressure in a normally aspirated petrol engine increases by 120 lb. per sq.

in. for each additional ratio of compression. Experience indicates that to maintain the same margin of safety and durability, the weights and areas of the moving parts, bearings, etc., need to be increased to an extent which adds to the purely mechanical losses approximately 2 lb. per sq. in. for each additional 120 lb. per sq. in. of maximum pressure. As a rough, and of course purely empirical, guide therefore, we may reckon on an increase of 2 lb. per sq. in. in the mechanical losses for each additional ratio of compression.

In the early 1920's, the poor quality of fuel then available, combined with the poor designs of combustion chamber, limited the compression ratio of petrol engines of the size we are considering to between 4·0 and 4·5 : 1. On looking over analyses of mechanical losses carried out in the author's laboratory on engines of that date, we find that the average figures for a 6-cylinder engine of about 8 litres capacity, as determined by motoring, was 14 lb. per sq. in. when running at 1600 r.p.m., as compared with an average of 18 lb. per sq. in. to-day. This may not be quite a fair comparison, for it may be argued that a greater measure of durability is expected of engines to-day, but, against this, we now have better bearing materials, better lubrication, better workmanship, and greater experience.

The higher ratios of compression, combined with the better knowledge of combustion conditions and combustion-chamber design, have enabled us to increase the indicated mean pressure by from 25 to 30 per cent, and thus maintain, but no more than maintain, substantially the same overall mechanical efficiency despite the increased friction losses.

Thus typical comparative figures at full load and at the same r.p.m. for a petrol engine of 1924 and 1948, both of similar design and duty, are:

	1924	*1948*
Compression ratio	4·2 : 1	6·0 : 1
Brake mean pressure, lb. per sq. in. ..	105	130
Motoring friction, lb. per sq. in. ..	14	18
Indicated mean pressure, lb. per sq. in.	119	148
Mechanical efficiency, per cent ..	88·2	87·8

At 30 per cent of full torque the figures become:

	1924	*1948*
Compression ratio	4·2 : 1	6·0 : 1
Brake mean pressure, lb. per sq. in. ..	31·5	39
Motoring friction, lb. per sq. in. ..	15	19
Indicated mean pressure, lb. per sq. in.	46·5	58
Mechanical efficiency, per cent ..	67·7	67·2

It will be seen from the above that so far as mechanical efficiency is concerned, no real improvement has been made during a quarter of a century.

Experiments carried out on variable-compression engines are liable to give a false impression in that the same working parts are, and of course must be, used throughout the full range of compression. It is usual to design these parts with bearing surfaces and areas to suit nearly the highest compression ratio which will be used; thus at low compression ratios, the overall mechanical losses are disproportionately great, while at the very highest ratios (which are seldom employed for

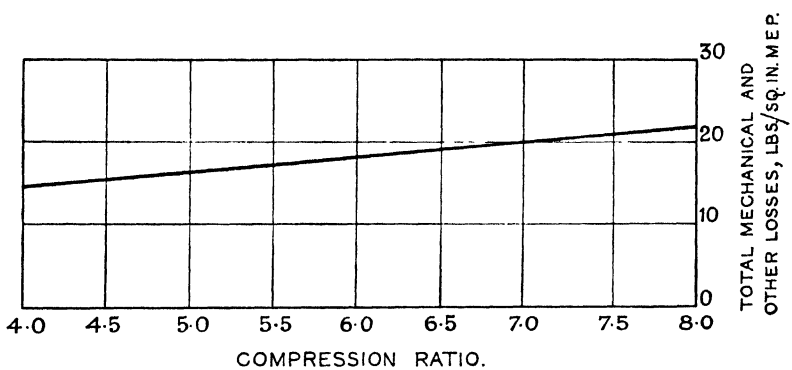

Fig. 9.6.—General trend of total mechanical and other losses with compression ratio under running conditions at full throttle

Petrol engine, 6-cylinder 8-litre type at 1600 r.p.m.

long) they are unduly low. This is a point which is not generally appreciated and which should be emphasized, more especially in view of the large number of variable-compression engines installed in universities and technical colleges.

The curve, fig. 9.6, which is based on purely empirical data, indicates the general trend of mechanical losses plotted against compression ratio—it is compiled from analyses of a large number of tests on various engines whose factors of safety and durability have been proved by mass experience over long periods.

The curves, fig. 9.7, show the variation in (*a*) compression pressure, (*b*) peak pressure, (*c*) air-cycle efficiency, (*d*) indicated mean pressure, (*e*) thermal efficiency, the two latter being based on the assumption that the overall indicated thermal efficiency for engines of the size and type we are considering may be taken as 66·6 per cent of the air-cycle. The curves, fig. 9.8, show the resultant mechanical efficiency, brake mean pressure, and brake thermal efficiency at full load after allowing for the variation in mechanical losses shown earlier in fig. 9.6.

The curves, fig. 9.9, show the same quantities when the operating load is 30 per cent of the full-load torque.

From these latter curves it will be seen that for a road-vehicle engine there is little to be gained in power and almost nothing to be

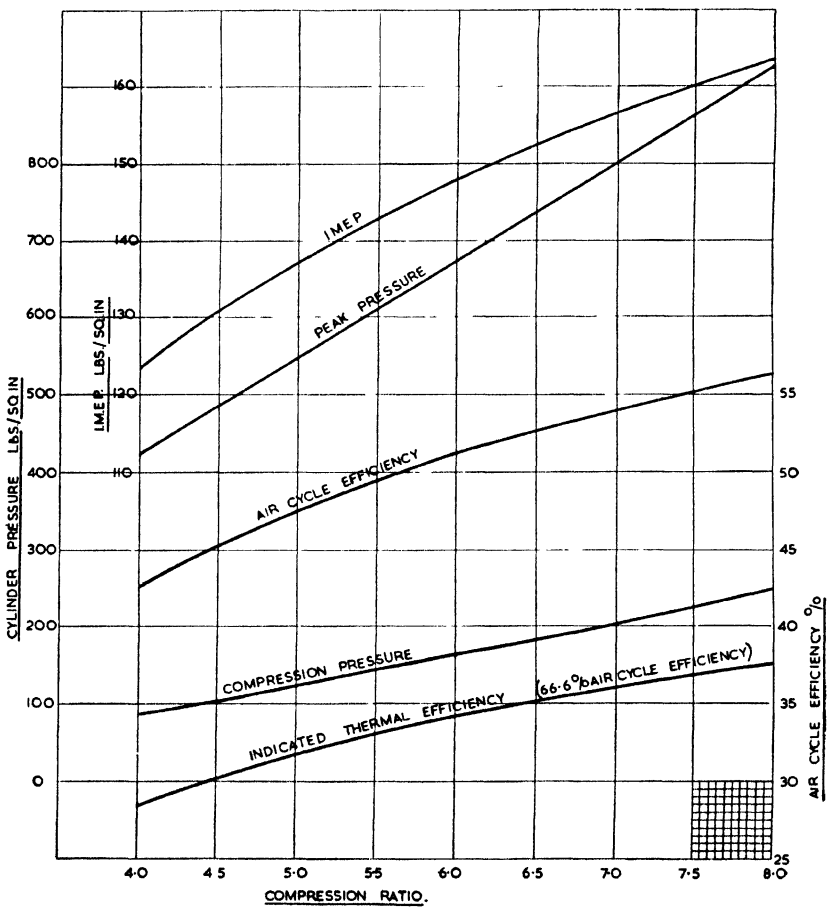

Fig. 9.7.—Curves showing variation in (*a*) compression pressure, (*b*) peak pressure, (*c*) air-cycle efficiency, (*d*) indicated mean pressure, and (*e*) indicated thermal efficiency with compression ratio

Petrol engine, 6-cylinder 8-litre type at 1600 r.p.m.

gained in fuel economy from the use of a compression ratio higher than 8·0 : 1, unless we are prepared to infringe on the accepted margins of safety or endurance.

It is a moot point whether mechanical losses should be compared at the same piston speed or at the same r.p.m.; clearly neither forms a

just basis for comparison; some of the individual items, such, for example, as the indicated air work, are a function directly of piston speed; others, such as the dynamic loadings, are dependent rather

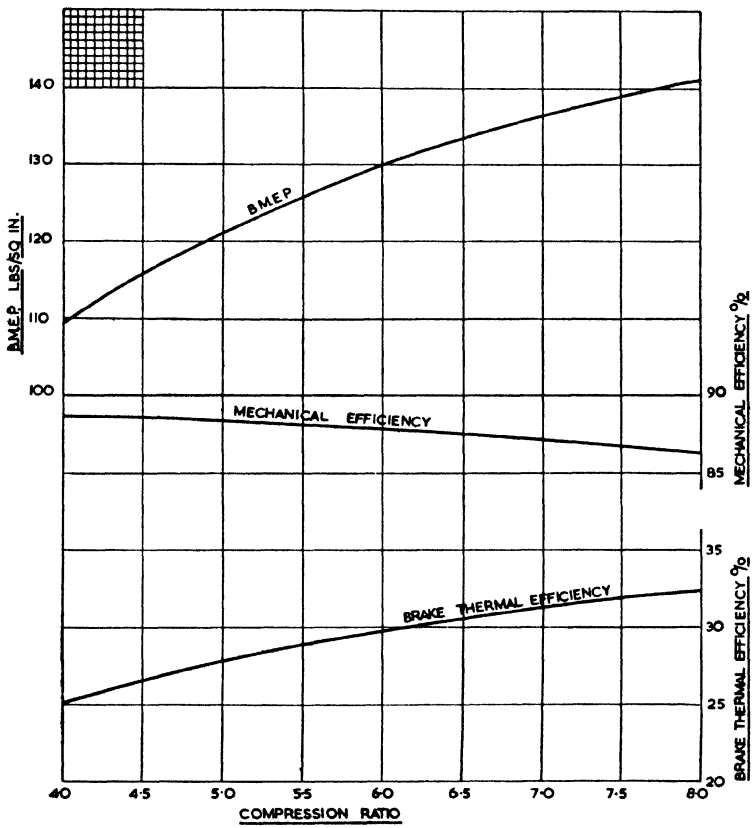

Fig. 9.8.—Curves derived from figs. 9.4 and 9.6 showing resultant (*a*) mechanical efficiency, (*b*) brake mean effective pressure, and (*c*) brake thermal efficiency at full torque and 1600 r.p.m. at various compression ratios

upon the r.p.m., and the fair basis of comparison must lie somewhere between these two extremes. In the preceding comparison both engines had the same stroke, so that the question does not arise.

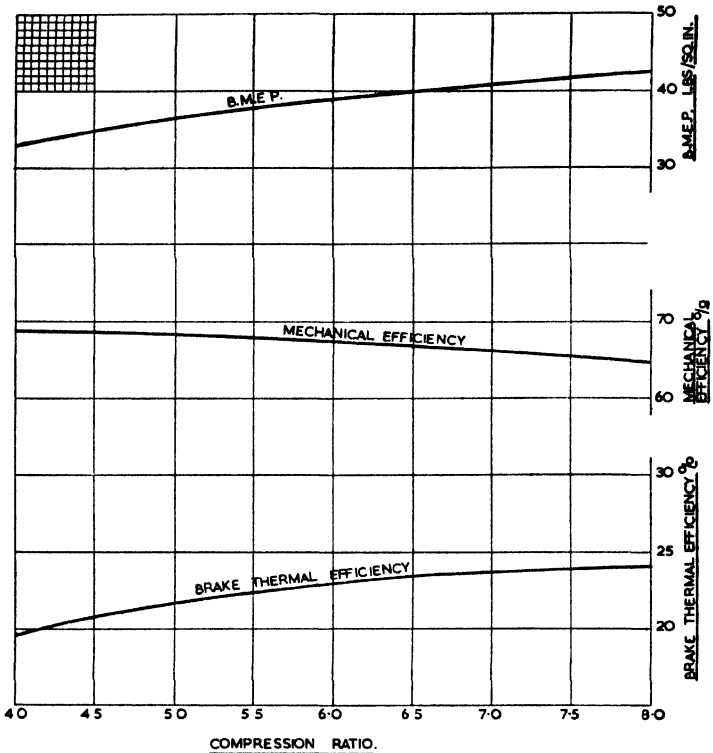

Fig. 9.9.—Curves derived from figs. 9.4 and 9.6 showing resultant (*a*) mechanical efficiency, (*b*) brake mean effective pressure, and (*c*) brake thermal efficiency at 30 per cent full torque

1 lb. per sq. in. M.E.P. added to losses for reduced throttle opening

Work done in Emptying and Filling the Cylinder

When dealing with four-cycle engines, it is usual to assess, as the air-pumping work, the actual indicated mean pressure during the exhaust and induction strokes and this is a true measure of the work done, but in terms of air work only. It neglects the friction of the mechanism involved in handling the air. When, however, we attempt to compare the virtues and vices of the four-cycle versus the two-cycle engine, this assessment becomes very misleading. In the four-cycle engine exactly half the total running time is devoted solely to the task of emptying and filling the cylinder; hence nearly half the total mechanical friction should be debited to this function; not quite half because during the idle strokes there is no appreciable gas pressure; hence the rings are not inflated and the piston friction will be substantially less. It would seem, however, that about 40 per cent of the

total frictional loss of the whole engine should be debited against the emptying and filling account.

In the case of the compression-ignition engine which we have analysed, the indicated air work was only 3·5 lb. per sq. in. but the total friction loss amounted to 21·5 lb. per sq. in. at 1600 r.p.m. If we take 40 per cent of this as the proportion of friction which should be debited to the emptying and filling account, this, then, becomes $(21{\cdot}5 \times 0{\cdot}4) + 3{\cdot}5 = 12{\cdot}1$ lb. per sq. in. When considering four-cycle engines only, this may be an academic point, or merely a question of accountancy, but when comparing two- and four-cycle engines, it immediately becomes one of practical importance.

Effect of Supercharge on Mechanical Efficiency

Let us consider next the effect of supercharge upon the mechanical efficiency, and for this purpose we will assume that the two engines we have taken previously as typical modern examples are both supercharged by independently driven blowers to a pressure which will ensure that the weight of air inhaled per cycle will be increased by, say, 60 per cent. We will assume also that the octane number of the fuel used in the petrol engine is high enough to permit of this without detonation so that the same compression ratio, viz. 6·0 : 1, can be maintained, and that in the compression-ignition engine also we maintain the same ratio of compression.

In the case of the petrol engine, the effect of supercharging will be to increase the whole pressure scale by 60 per cent, but in that of the C.I. engine, although the compression pressure will be increased in like proportion, the maximum peak pressure, if it be of the high air-swirl type, will be increased very little for, at the higher density, the heat cycle will approach much more nearly that of constant pressure, and optimum efficiency will be attained when the peak pressure is only about 10 per cent above the compression pressure, as compared with about 50 per cent when normally aspirated.

If we are going to maintain the same standard of durability, etc., as before, we shall, in the case of the petrol engine, have to increase considerably the weight of the pistons, the diameter of the crankshaft, and the area of bearing surfaces generally, to meet the higher pressures; but in that of the C.I. engine, a very much smaller increase will suffice, since a 60 per cent supercharge will result in only about a 20 per cent increase in maximum pressure, though of course the period of sustained high pressure will be prolonged. Against this, however, the much more gradual rate of pressure rise will reduce the shock loading on the bearings, etc., so that, taken by and large, we need increase only very slightly, if at all, the scantlings of the C.I. engine. Fig. 9.10 shows comparative indicator diagrams taken from two such engines, each when working with a 60 per cent supercharge.

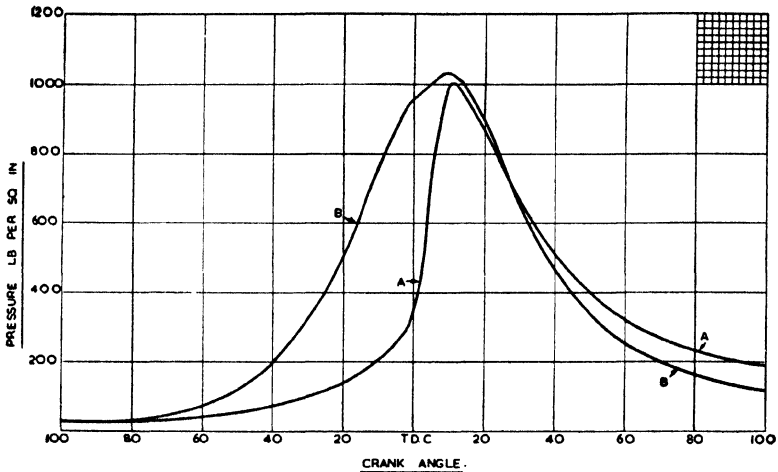

Fig. 9.10.—Comparative full-load indicator diagrams

(A) Petrol engine, C.R. 6·0 : 1 with 60 per cent supercharge.
(B) Compression-ignition engine, C.R. 16·0 : 1 with 60 per cent supercharge.

So far, then, as the purely frictional losses are concerned, those due to the valve gear and auxiliaries will, of course, remain unchanged. Piston and piston-ring friction will be increased due to the higher gas pressures and the same will apply to the crankshaft bearings.

If no provision is made for strengthening either engine to meet the higher gas pressures, then the changes in purely mechanical friction would be substantially as in Table I.

TABLE I

Source of friction	Engine A		Engine B	
	Unsupercharged	Supercharged	Unsupercharged	Supercharged
Auxiliaries and valve mechanism	2·5	2·5	3·0	3·0
Crankshaft	4·0	4·5	6·0	6·5
Pistons	8·0	9·0	12·5	13·5
Total, exclusive of air work ..	14·5	16·0	21·5	23·0

If, however, we are going to maintain the same standard of durability, we shall have to increase very considerably the scantlings of the moving parts of the petrol engine. Such strengthening will increase the purely mechanical friction by about 6 lb. per sq. in. for, at a com-

pression ratio of 6 : 1, the maximum pressure will be increased by about 400 lb. per sq. in. In the case of the C.I. engine about 3 lb. per sq. in. extra loss will result from the small increases required. These figures, of course, are somewhat guess-work, but cannot be very wide of the mark. Thus the total friction loss will become 22 lb. per sq. in. in the case of the petrol, and 26 lb. per sq. in. in that of the C.I. engine.

The air-pumping work will, of course, be changed from a negative to a positive value. To increase the air content of the petrol engine by 60 per cent we shall need an air pressure of approximately 9 lb. per sq. in. gauge, allowing for temperature on the one hand, and on the other for the fact that the clearance volume is supercharged as well as the swept volume. To give the same increase in the case of the C.I. engine, with its much smaller clearance volume, we shall need a pressure of about 10 lb. per sq. in.

The indicated air work expended on emptying and filling the cylinders when operating with atmospheric induction was found to amount to 3·5 lb. per sq. in. With a 60 per cent increase in density, this will be increased to about 5 lb. per sq. in. Against this we have positive pressures of 9 and 10 lb. per sq. in. respectively, so that the net result will be a positive mean pressure of 4 lb. per sq. in. in the case of the petrol and 5 lb. per sq. in. in that of the C.I. engine. Hence the overall mechanical and fluid-pumping losses will become 18 and 21 lb. per sq. in. respectively. The latter figure, in particular, will be found to be very much less than the motoring measurement would show, for at these high densities, the fictitious compression/expansion loop will assume still larger proportions and, from observations on other engines, it is probable that the motoring figure under these conditions will be as high as 27 or 28 lb. per sq. in. We find then that with a blower driven independently of the engine and delivering a 60 per cent supercharge, the total fluid and friction losses will be 18 and 21 lb. per sq. in. respectively, the indicated mean pressures 237 and 229 lb. per sq. in., the brake mean pressures 219 and 208 lb. per sq. in. and the mechanical efficiencies 92·9 per cent and 91·3 per cent.

The above figures do not, of course, take into account the power absorbed in driving the blower. This varies so much, depending upon the efficiency of the blower, etc., that it is difficult to generalize; they apply directly therefore to the case when the blower for supercharging is driven by some independent source of power, either by a separate engine or by a turbine from the exhaust, though, in the latter case, there would be additional exhaust back pressure to take into account.

Conclusions

We can sum up the arguments in this chapter as follows:

(1) Mechanical losses within the structure of the engine are largely a function of the maximum pressure at which it operates, for this governs both the weight and therefore the inertia of the moving parts, the diameter and area of the principal bearing surfaces and the loading of the piston-rings.

(2) Other things being equal, mechanical efficiency is a function of the ratio of mean effective to maximum pressure; the higher this ratio the higher the mechanical efficiency.

(3) In the case of engines used for road transport we should concentrate our attention upon the conditions that obtain when the engine is operating at about 30 per cent of full torque.

(4) In all applications we must aim at the best compromise between efficiency on the one hand, and safety, durability, and silence on the other.

(5) In all internal-combustion engines of the single-acting trunk-piston type, the piston itself accounts for the largest proportion, usually about 50 to 60 per cent of the total frictional losses.

CHAPTER X

Supercharging

The application of supercharging to spark-ignition engines is usually restricted to aircraft and racing-car engines, and has not found favour in any other fields, but for reasons which will be discussed there is a much better case for its application to compression-ignition engines.

Taken by and large, the density of the atmosphere that Nature has provided for us at sea-level is admirably suited to the tastes of the spark-ignition engine.

Of this atmosphere we may take as much as we please, and that as a free issue, so long as we are content to accept the density she offers us. If we want a higher density, we must be prepared to pay for it at the cost of a considerable expenditure of energy and of additional ironmongery and, as a rule, we do not find it worth while.

The case of the aircraft engine is, of course, quite different in that it lives in another element and has to adapt itself to changes in atmospheric density and temperature of a magnitude quite unknown to its terrestrial brothers.

We may employ supercharging either to obtain more power from a given size of engine, or to compensate for the reduction of density with altitude, or both. In the case of the racing-car the former is our one and only objective; in that of the aero-engine we have both objectives in view.

The power output at the piston head of any internal-combustion engine is directly proportional to the product of the weight of air it can consume in unit time, multiplied by the thermal efficiency at which it is employed. The useful power output at the crankshaft is the same, less the internal frictional losses of the engine and a large proportion of the power required to drive the supercharger, for in any four-stroke engine a proportion, usually less, and often much less, than 50 per cent, of the power absorbed by the supercharger is returned, by pneumatic transmission, as useful work on the piston.

For any given capacity of engine, and for any given thermal efficiency, we can double the indicated power either by doubling the speed of rotation or by doubling the density of the air. The former is not usually practicable, for it is to be presumed at least that we are already running the engine as fast as prudence permits, and even if we

cast prudence to the winds, we should still be baulked, on the one hand by inadequate breathing capacity and, on the other, by the mounting internal friction losses, due to excessive dynamic forces.

We can increase the thermal efficiency by raising the ratio of compression or expansion, but in this direction we are limited, in a spark-ignition engine, both by the tendency of the fuel to detonate and by

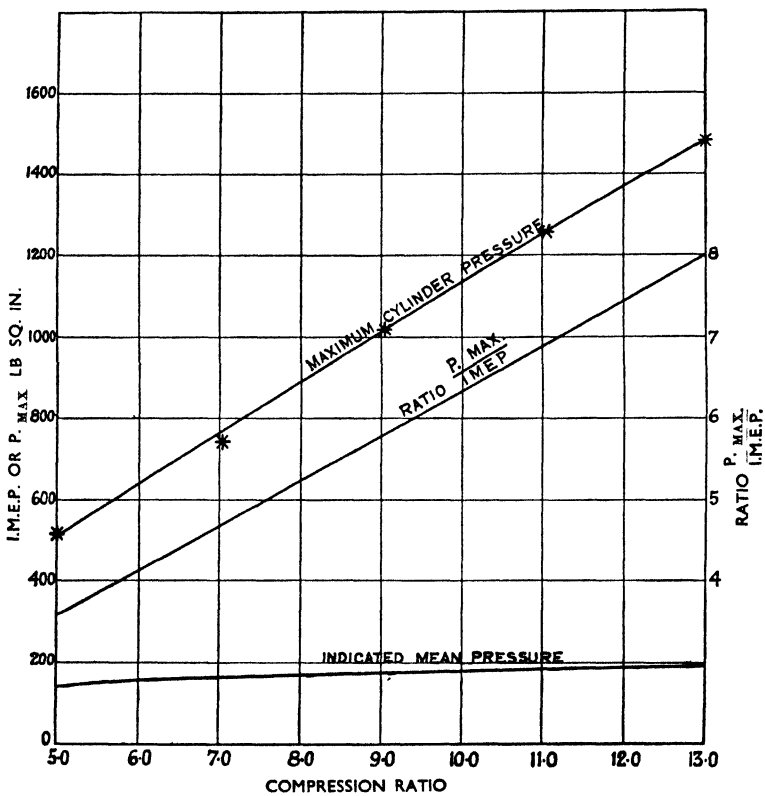

Fig. 10.1.—Relationship between maximum and mean indicated pressure as recorded on the small variable-compression E6 engine when using a non-detonating fuel

the very rapidly increasing maximum pressures. In round figures the maximum peak pressure of a spark-ignition engine increases by 120 lb. per sq. in. for each ratio of compression. The curve of thermal efficiency, however, tends to flatten out to such an extent that, taking into account the higher mechanical losses resulting from high peak pressures, there is little to be gained from the use of a compression ratio higher than about 7·5 : 1 or 8·0 : 1 if the mean load factor is very low, as in ordinary road-vehicle engines. In the case of racing-engines, where the load factor is higher and we can afford to go to extreme

lengths and take some risks in the way of cutting down mechanical losses, it may pay to use a compression ratio of 9 : 1 or 10 : 1.

Fig. 10.1 shows the observed relation between maximum peak and indicated mean pressure with optimum ignition timing and maximum-power mixture strength, over the range of compression from 5·0 to 13·0 : 1 as measured in the small variable-compression "E6" engine, described in a later chapter, but the readings in fact differ very little from the theoretical values. From this it will be seen that the ratio of maximum to mean pressure ranges from 3·6 : 1 at a compression ratio of 5·0 : 1, to 7·9 : 1 at a ratio of 13·0 : 1.

By contrast, when supercharging, the ratio of maximum to mean cylinder pressure remains virtually constant irrespective of the supercharge pressure.

General Considerations

When an engine is inhaling from, and exhausting into, the same atmosphere, the volumetric efficiency is a function only of the volume swept by the piston, and is independent, or almost independent, of the capacity of the clearance space; hence, except for a quite small secondary effect, due to direct loss of heat to the cylinder walls during the brief period between the effective end of the exhaust and the effective beginning of the suction, the volumetric efficiency is independent of the compression ratio.

When, however, the engine is inhaling from a source at a pressure higher than that against which it is exhausting, this no longer holds good, for the clearance volume, as well as the swept volume, then becomes supercharged to an extent depending upon the difference in absolute pressure between the entering air and the residual exhaust products.

Let us suppose, for example, that the volume of the clearance space is 20 per cent of the swept volume, and that the absolute pressure of the supercharge is just twice that of the surrounding atmosphere, then, neglecting secondary factors, half the clearance volume will be supercharged with fresh air. Under these conditions the effective cylinder volume will be increased by 10 per cent and, *ceteris paribus*, the power increase will be not 100 per cent but 120 per cent. Thus, were the thermal efficiencies the same, then the lower the compression ratio and the larger the clearance volume the greater would be the power response to supercharging.

When a mechanically driven supercharger is employed the exhaust is, of course, discharged against atmospheric pressure only, and full advantage can be taken of the supercharging of the clearance volume, but when an exhaust turbine is used to drive the supercharger, this imposes a certain amount of back pressure which may well be equal to, or even greater than, the supercharge. By dividing up the exhaust

system, so that in any one pipe the exhaust flows just do not overlap, i.e. by using, in the case of a four-cycle engine, a separate short exhaust pipe for each group of three cylinders, it is possible to reduce considerably the terminal exhaust pressure, for some use can then be made of the kinetic energy in the exhaust both to help the turbine at the beginning, and to make use of it as an exhauster at the end of each exhaust stroke, but the extent to which this can be done in practice is generally restricted by geographical and plumbing limitations.

Whether the supercharge be provided by an exhaust or a mechanically driven blower, it is of vital importance to keep its temperature as low as possible not only from the obvious motive of getting the greatest possible weight of air into the cylinder, but also because:

(1) In the case of a spark-ignition engine the higher the initial air temperature the greater the tendency to detonation or pre-ignition.

(2) In any form of internal-combustion engine, the temperature range throughout the whole cycle is a function of the initial temperature. The higher the initial temperature, the greater the losses, due both to direct heat loss to the walls and to dissociation, etc. Thus the thermal, as well as the volumetric, efficiency is reduced with every increment of air temperature.

As a rough and rather extreme example, let us consider the effect of a difference of, say, 100° C. in the temperature of the supercharge.

In a spark-ignition engine of average compression ratio, the absolute temperature at the end of compression, i.e. before the liberation of heat, will be nearly twice the initial temperature; the difference at this, the effective starting point of the cycle, therefore becomes 200° C., and the flame temperature will be increased by nearly a like amount, thus both the direct heat losses and those due to increase of specific heat and dissociation will all be increased very considerably, with a corresponding reduction in thermal efficiency.

In the case of a compression-ignition engine with its much higher ratio of compression, a difference of 100° C. in the initial temperature means a difference of nearly 300° C. at the end of compression and therefore throughout the rest of the cycle; moreover, as has been shown in Chapter V, the C.I. engine is more susceptible to direct heat loss. On the other hand, while any increase in the compression or flame temperature tends to promote detonation or pre-ignition in the spark-ignition engine, this does not apply to the compression-ignition.

(3) All the mechanical troubles arising from high temperature, such as piston failure, ring sticking, and exhaust-valve troubles, are, of course, accentuated greatly by any increase in the cycle temperature.

It is thus essential on the grounds of temperature that the adiabatic efficiency of the supercharger shall be as high as possible and, wherever possible, effective intercooling between the supercharger and the engine cylinder should be provided; the higher the degree of supercharge, the more important does this become.

Supercharged Spark-ignition Engines

Apart from the direct increase in power due to the greater weight of air inhaled per cycle, the effects of supercharging upon the spark-ignition engine are:

(1) The increased density and somewhat increased temperature (depending upon the degree of intercooling, etc.) both tend to speed up the combustion process not only by reducing the delay period, but also by accelerating the rate of spread of inflammation. In this latter respect, the effect is similar to an increase in the degree of turbulence. Since, in most modern high-duty petrol engines, the degree of turbulence is already adequate, the effect of supercharging is often to overdo it, thus rendering the engine more sensitive to mixture ratio and tending to narrow down the range of burning at both the rich and weak ends. For best results under supercharged conditions, the normal degree of turbulence should be somewhat below rather than above the optimum.

(2) The increased density and temperature increase, of course, the tendency both to detonation and to pre-ignition and thus set a limit to the degree of supercharge that can be employed in the petrol engine. Here it is difficult to generalize, for some fuels are more temperature- and others more pressure-sensitive; thus two fuels rated at the same octane number by the usual technique may respond somewhat differently to supercharging. In the case of all volatile petroleum fuels, however, the tendency both to detonation and to pre-ignition can be reduced enormously by employing a very rich mixture of the order of 50 per cent to 60 per cent above the chemically correct value. The effect of this is two-fold:

(*a*) All such fuels, and more especially those of high octane number, show, under the same temperature conditions, a greatly reduced tendency to detonate when a large excess of fuel is present. This is illustrated in fig. 10.2, which shows the variation in H.U.C.R. with mixture strength of iso-octane, cyclo-hexane, and benzene.

(*b*) The latent heat of evaporation of the excess fuel serves to lower the intake temperature. In the case of fuels of the alcohol group, as used in racing-cars, this latter plays a very important part, but in that of hydrocarbon fuels, whose latent heat of evaporation is relatively low, it cannot be a very important factor.

(3) The heat losses to the cylinder walls during combustion and expansion do not increase in direct proportion with the degree of supercharge, e.g. with a supercharge of 2 atmospheres absolute at the same intake air temperature, the total flow of heat to the cooling

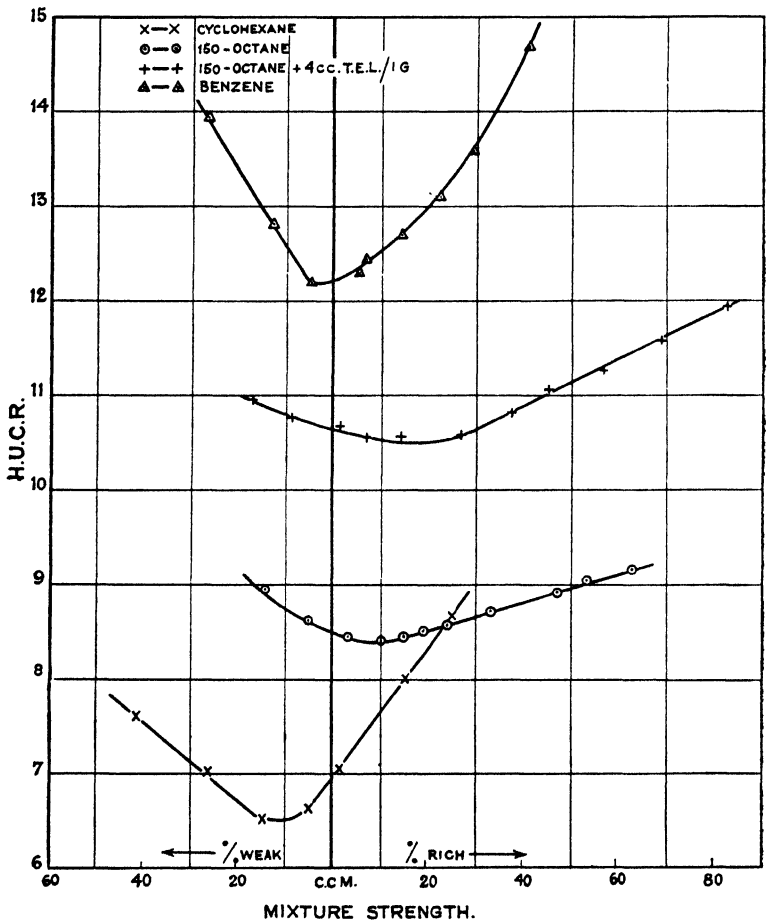

Fig. 10.2.—H.U.C.R./mixture strength curves on representative fuels

Test conditions:

Engine speed, 1500 r.p.m. Engine coolant temperature, 90° C.
Inlet air temperature, 120° C. Solex carburettor.

Ignition advance to give maximum cylinder pressure 13° after T.D.C. in all cases

medium is increased by only about 70 per cent. This should mean that the thermal efficiency would be slightly improved, but in most cases any gain in thermal efficiency resulting from reduced heat loss is largely offset by inability to run on so weak a mixture strength as

when naturally aspirated. By the same token, of course, the temperature of the exhaust is increased, hence the exhaust valve in particular has a more trying time.

Fig. 10.3 is a composite graph, compiled from a very large number of tests carried out in the author's laboratory on behalf of the Air Ministry during 1930–36, on variable-compression and other research

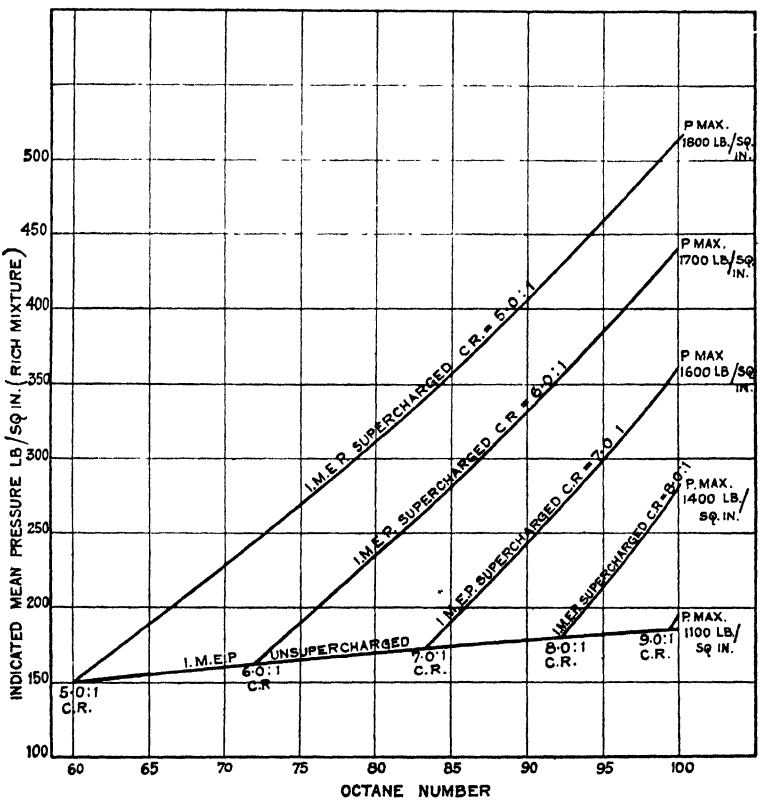

Fig. 10.3.—Graph of I.M.E.P. at different compression ratios over the range of octane numbers 60 to 100 with and without supercharging

units, showing the relation between the octane number of the fuel and the indicated mean effective pressure as limited by the incidence of detonation, when:

(*a*) the compression ratio is raised until the incidence of detonation, and

(*b*) at any given ratio, the I.M.E.P. is increased by supercharging to the same limit.

It assumes:

(1) That the engine has an individual cylinder capacity of between 1·5 and 2·5 litres; if larger, the M.E.P.s would be reduced; if smaller, they would be increased all along the line.

(2) That the cylinder is liquid-cooled; if air-cooled the cylinder wall temperatures would be higher and the performance reduced by the earlier incidence of detonation or pre-ignition, or both.

(3) That poppet, not sleeve, valves are used. In the case of sleeve-valve engines nearly one ratio higher compression, or about 25 per cent more I.M.E.P., when supercharged, could be used throughout.

(4) That the temperature of the supercharge is such as would be supplied by a blower having an adiabatic efficiency of 70 per cent. If intercooling be applied, then again the whole scale would be raised.

(5) That the revolution speed lies between the limits 2000 and 3000 r.p.m. If lower, the limiting I.M.E.P. would be reduced.

(6) That the fuels used throughout the range of octane numbers have normal average characteristics. This latter is perhaps the most dangerous assumption but, throughout all the experiments, care was taken to avoid the use of fuels whose response to temperature, pressure, or mixture strength differed widely from average values.

(7) That all tests were carried out with a fuel/air ratio of between 50 and 60 per cent in excess of the chemically correct. Attempts to carry out similar tests with a mixture strength giving minimum fuel consumption yielded such widely varying results, depending upon the chemical nature of the fuels, that no general conclusions could safely be drawn from them.

Such a graph may serve as a guide but, of course, must not be taken too literally, since so many variables enter the picture.

Fig. 10.4 shows the results of an individual test, one of many taken during the series, in this instance on a sleeve-valve engine, using 87 octane fuel and running throughout at a speed of 2500 r.p.m.

In this case, and with a compression ratio of 7·0 : 1, the engine was run on an economical mixture, i.e. about 10 per cent weak, and supercharge applied until the first incidence of detonation, which occurred when the B.M.E.P. had reached 168 lb. per sq. in. The mixture strength was then increased, step by step, and more supercharge applied until the same intensity of detonation was recorded; this process was continued until a point was reached at which no further enrichment was effective. In fact, after about 60 per cent excess fuel, not only did further enrichment have no effect but there was even some indication that it increased the tendency to detonate. A finely

pulverized water spray was then delivered into the induction pipe, which served to suppress detonation, in part by the intercooling it provided, and in part by the influence of steam as an anti-detonant, and so allowed of further supercharging. This was continued progressively, admitting just sufficient water at each stage to ward off detonation, until a B.M.E.P. of 290 lb. per sq. in. was reached, which was found to be the limit of the dynamometer. At the same time it was noted that, with the addition of water, the influence of steam as an anti-knock allowed of the fuel/air ratio being much reduced. From

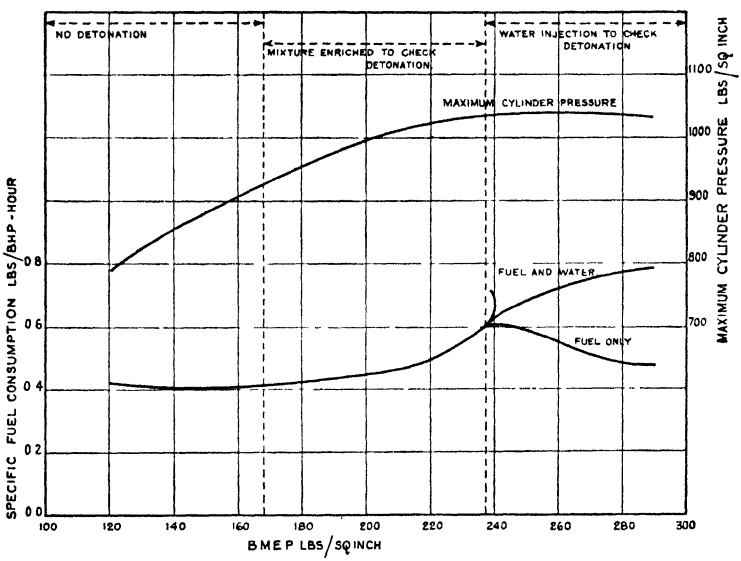

Fig. 10.4.—Typical sample test showing variation in maximum B.M.E.P. with mixture strength and with water injection. Fuel, octane 87 petrol

this curve, fig. 10.4, it will be seen that under these operating conditions the limiting B.M.E.P. that could be reached with 87 octane petrol alone at an economical mixture strength was 168 lb. per sq. in. (= 200 lb I.M.E.P.). By enriching the mixture to the limit of usefulness the B.M.E.P. could be stepped up to 237 lb. per sq. in. (= 267 lb. I.M.E.P.). By the introduction of water, it could be further stepped up to 290 lb. per sq. in. or 319 lb. I.M.E.P., and probably more; at the same time the fuel/air ratio could be reduced once again; in fact, with water injection, no appreciable advantage was found from the use of an over-rich fuel/air mixture. It will be noted that the total specific consumption of liquid, i.e. fuel + water, is not so very much greater than when running on a very rich mixture of fuel alone.

The slope of the curve of maximum cylinder pressure is interesting in that after the injection of water it no longer rose but even tended

very slightly to fall, and the same applied to the gross heat flow to the cooling water which reached a maximum at a B.M.E.P. of about 230 lb. per sq. in., and thereafter fell off until, at a B.M.E.P. of 290 lb. per sq. in. it had fallen to the same level as that at 170 lb. without water injection.

In this as in other tests, the supercharge air was supplied from an independent source but its temperature was adjusted by pre-heating to that which would be delivered by a supercharger having an adiabatic efficiency of 70 per cent and with no intercooling.

Fig. 10.5 is a cross-section of the engine used for this test; it is a single-cylinder sleeve-valve research unit of 5 in. bore by 5·5 in. stroke, of very robust design, but the cylinder and cylinder head, which are of light alloy, are extremely light and of aircraft scantlings.

With water alone, however, evaporation of the water was by no means complete even at the highest degree of supercharge, and it was found more effective to add a substantial proportion of some volatile alcohol, such as methanol, in order to increase the volatility. Since for aircraft it was, in any case, desirable to add some sort of anti-freeze, it was considered that methanol would serve the dual purpose of protection against freezing and of increasing the volatility. Methanol, however, is very prone to pre-ignition and, on this score, it is unwise to use too great a concentration; the safe limit appears to be a 50/50 methanol/water mixture.

Comparative tests, as between water injected separately and the same proportion of water dissolved in the fuel by the aid of a mutual solvent such as acetone, showed that the latter was far more effective, due presumably to the fact that, when admitted in solution in the fuel, evaporation was completed much earlier in the cycle and the full effect of its latent heat could be realized. Again, experiments with the admission of dry steam served to show, independently, the effect of steam as a diluent and anti-knock, as distinct from that of water as a cooling agent, and thus to assess separately its two functions.

Where very high supercharge pressures are involved as, for example, in the case of military aero-engines, the choice lay between intercooling by means of a heat exchanger or by the injection of water or water and methanol. The former, of course, could be maintained indefinitely but involved a good deal of extra drag and some additional large scale and rather vulnerable plumbing; the latter, because of the heavy consumption of liquid, could be but a temporary expedient only, but served admirably as a means of additional boosting for take-off and for emergency use. In practice both methods were adopted during the war, the choice depending largely on the type and purpose of the aircraft to which the engine was fitted.

So far as spark-ignition engines are concerned, it would seem that, as applied to aircraft, supercharging is essential, not only as a means

of restoring ground-level density at high altitude, but also as a means of increasing greatly the specific power output of the engine in terms both of weight and of frontal area.

The limit of supercharge that can safely be applied is determined by:

(1) The octane number of the fuel.

(2) The ability of the engine to withstand the intensity of pressure and heat flow involved.

Both the tendency to detonate and the intensity of heat flow can be reduced by intercooling either by means of a heat exchanger or by water injection, or both; by the latter means it was found possible to increase the power output by an additional 20 per cent without increasing either the tendency to detonate or the intensity of heat flow to the piston, cylinder walls, or exhaust valves.

In the case of engines of fairly large power which are called upon to exert full torque only at high speed, such as in aircraft or marine service, the centrifugal or axial-flow types of supercharger are probably the most suitable, since either can deal efficiently with far larger volumes of air than can be handled by any form of positive blower of comparable dimensions or weight, but in services involving the exertion of high torque at low speeds, such as apply to all forms of road or rail transport, this type of supercharger is unsuitable, and resort must be had to some form of positive blower. There would seem, however, to be but little argument in favour of supercharging as applied to ordinary spark-ignition road-transport engines because:

(1) The primary requirement of such engines is high torque at low revolutions, i.e. under the conditions where detonation would be most troublesome and insistent, thus necessitating the use either of a very high-octane and therefore expensive fuel, or some additional complication such as the addition of water or water-methanol mixture.

(2) The weight and space limitation is not nearly so severe as in aircraft, hence a larger unblown engine would seem to be preferable.

(3) At the present day, no form of rotary blower exists which will deliver a high supercharge pressure at low revolution speeds.

Supercharged Compression-ignition Engines

All the above considerations apply to spark-ignition engines. In the case of compression-ignition the picture is very different because:

(1) The bogies of detonation and pre-ignition are absent.

(2) The greater the density, the shorter the delay period, hence the smoother, more controllable and more complete the combustion.

(3) While it is essential to keep the temperature of the supercharge as low as possible, yet an increase in temperature, though reducing both the volumetric and thermal efficiency, does not, as in the case of the petrol engine, give rise to detonation or pre-ignition: on the contrary, it tends, though only very slightly, to assist the combustion process.

(4) The higher the supercharge pressure the less sensitive does the engine become to either the cetane number or the volatility of the fuel; hence a wider range of fuels can be used, but this applies, in full force, only so long as the supercharge pressure can be maintained at all speeds and at all loads.

(5) As explained in the chapter on "Distribution of Heat" the direct loss of otherwise recoverable heat is more serious in the C.I. than in the petrol engine, and since this loss increases only as about the 0·6th power of the density, the gain in thermal efficiency, due to a reduction in relative heat loss, is greater in the C.I. than in the spark-ignition engine.

(6) There is evidence that in some, if not in most, forms of C.I. combustion chamber, the proportion of oxygen that can be consumed increases slightly with increase of density. Thus the return in power output is somewhat greater than would be expected from the direct increase in density and thermal efficiency. Experiments on a "Comet Mark III" engine, designed for very high pressures, showed that at the point of just visible smoke in the exhaust, and at the same induction air temperature, the proportion of air consumed ranged from 82 per cent with atmospheric induction up to 86 per cent with an induction pressure of 3 atmospheres absolute.

(7) As compared with a spark-ignition engine, the mechanical efficiency of the C.I. engine is considerably lower; hence it benefits more by any increase in the effective mean pressure, more especially so when such increase is not accompanied by a corresponding increase in maximum pressure. In the case of the "Comet Mark III", for example, the optimum ratio of maximum to brake mean pressure at atmospheric induction was found to be 7·7 : 1, but with a supercharge of 1·66 atmos. abs., the ratio fell to 6·2 : 1, a very substantial gain. In the case of a direct-injection open-chamber engine, very much the same relationship as between atmospheric and supercharged conditions was found, but the ratio in both cases was somewhat higher.

(8) Given sufficient intercooling, the gain in both mechanical and thermal efficiency will more than compensate for the power absorbed by the blower at the higher load ranges, when the latter is driven mechanically, and at almost all load ranges when the exhaust energy is used to drive the blower, but so much of course depends both upon the efficiency of the blower and the degree of super-

charge and intercooling that it is impossible to generalize as to the point in the load range beyond which the overall efficiency is improved by supercharging.

The following data and conclusions have been drawn by the author from a long series of experiments carried out in his laboratory on a large number of high-speed C.I. engines of both the direct- and indirect-injection types and with cylinder diameters ranging from 3 in. to 7 in. In the course of these experiments, supercharge pressures up to a maximum of 7 atmospheres absolute were explored.

The research may be divided into two categories:

1. The use of a moderate degree of supercharge in engines of normal design, and at a compression ratio suitable for running under normally aspirated conditions.
2. The use of a very high supercharge in engines of highly specialized design mostly, but not all, of the two-stroke cycle type intended to serve as the high-pressure elements of a compound system. In this case, and in order to keep the maximum cylinder pressures within practicable limits, a relatively low ratio of compression and a specialized design must be employed.

The latter category is probably justified only when full use is to be made of the large amount of potential energy left in the exhaust, and is of immediate practical interest only in connection with a compound system, but the results obtained proved useful also as affording extreme points on the performance curves and thus serve to confirm that there is no change or break in the general trend of response to supercharge.

The conclusions, and the data from which they are drawn, relate primarily to the first category, though they are modified only in degree when applied to the second.

In the first category, it is postulated that the engine shall be of normal four-stroke type, having a compression ratio high enough to permit of normal cold-starting and of running under naturally aspirated conditions on light gas-oil, but modified only in such minor details as were found necessary or desirable.

All the data in this category have been obtained from high-speed engines, mostly from single-cylinder research units. It should be pointed out that all tests were run with air supplied from a main compressing plant, thus all the data given relate to the gross power, no allowance being made for the work done in driving the compressor. On the other hand, the research units employed have, as compared with multi-cylinder engines, a low mechanical efficiency, hence all fuel consumption figures on a basis of brake horse-power are somewhat higher than normal.

The practical upper limit of supercharge is reached when the maximum cylinder pressures are such as to cause:

1. " Scuffing " of the piston-rings and heavy liner wear.
2. Overloading of the bearings.
3. Leakage of the cylinder-head joints, due to springing of the cylinder-head bolts, etc.

With an engine of conventional design, with copper-lead bearings and a surface-hardened crankshaft, maximum cylinder pressures ranging up to 1200 lb. per sq. in. are usually permissible. As will be shown later, this entails limiting the supercharge pressure to something not exceeding 2 atmospheres absolute when using a compression ratio of the order of 15·0 : 1.

Conclusions (General)

Supercharging tends very greatly to reduce the ignition delay period and as a result:

(*a*) The engine runs extremely quietly and smoothly.

(*b*) The optimum ratio of maximum to compression pressure is considerably lower and under better control.

Fig. 10.6 shows the effect on the performance of a " Comet Mark III " unit of varying the static time of start of injection, the true start being, of course, some few degrees later. In this series the quantity of fuel injected per cycle was kept constant throughout, as also all other conditions, the only variable being the time of start of injection. It will be noted:

(*a*) That with a static timing of 6·5° before top centre the indicator diagram is virtually that of a true constant pressure cycle, i.e. both compression and peak pressures are almost identical at 1000 lb. per sq. in.

(*b*) At this timing the brake mean pressure is only 5 per cent, and the specific fuel consumption 4 per cent, below the absolute optimum.

(*c*) That for all practical purposes the optimum performance is obtained with an injection timing 9° before top centre, at which setting the maximum peak pressure is 1160 lb. per sq. in.

(*d*) With settings earlier than 9° the gain in performance is negligible and certainly not sufficient to justify the higher peak pressure.

Fig. 10.7 shows a similar series of tests carried out under identical conditions on a similar research unit but with a direct-injection open-type combustion chamber. By comparison it will be noted:

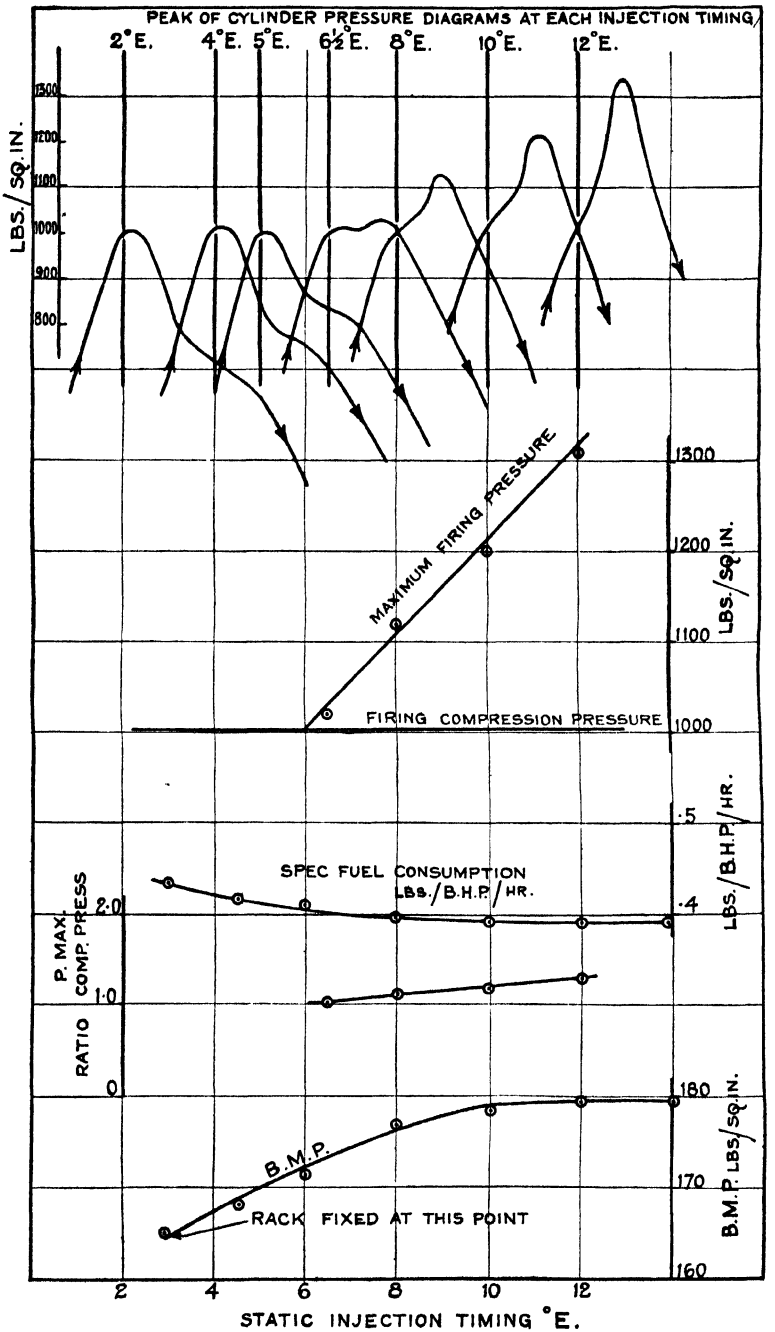

Fig. 10.6.—Curves showing the effect of static injection timing on the performance and cylinder-pressure diagram of E18/1 Comet Mark III engine, bore 5 in. × stroke 5 in.

Test conditions:

Engine speed, 1250 r.p.m. 20 in. Hg. boost, 60° C. I.A.T. at 170–180 B.M.P.

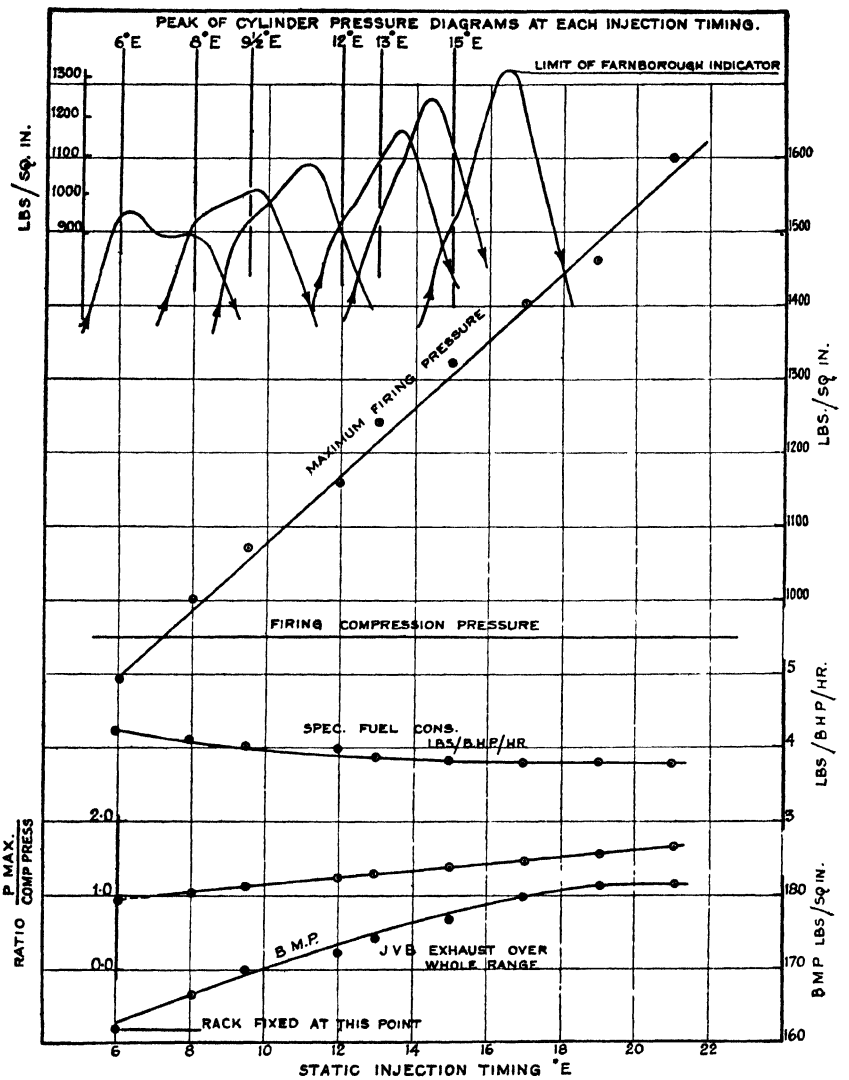

Fig. 10.7.—Curves showing the effect of static injection timing on the performance and cylinder-pressure diagram of E16/10 direct-injection engine, bore $4\frac{3}{4}$ in. × stroke $5\frac{1}{2}$ in.

Test conditions:

Engine speed, 1250 r.p.m. 20 in. Hg. boost, 60° C. I.A.T. at 170–180 B.M.P.

(*a*) That the specific consumption at the optimum point is about 3 per cent lower than the "Comet III" as compared with about 6 per cent lower when running unsupercharged.

(*b*) That the constant pressure diagram is obtained with an injection advance of about 7° at which point the B.M.E.P. is 10 per cent, and the specific consumption about 8 per cent below the optimum.

(*c*) That, so far as specific fuel consumption is concerned, the practical optimum is reached with an injection advance of about 13° with a peak pressure of about 1220 lb. per sq. in., but that at this timing the B.M.E.P. is still about 4 per cent below the optimum.

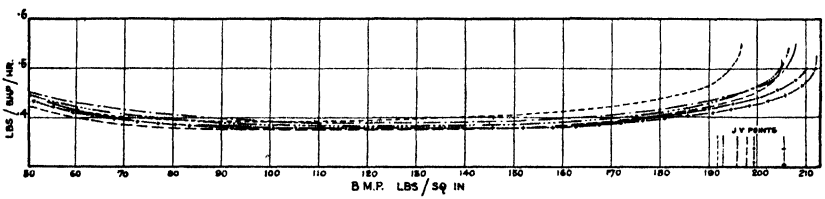

Fig. 10.8.—Fuel tests (load-range curves) on E18/1 Comet Mark III engine, bore 5 in. × stroke 5½ in.

Fuels:

		Cetane No.	Sp. Gr. at 15° C.
— · — · — · —	Heavy Diesel	38	0·9145
— — — — —	Marine Diesel	43	0·8730
—···—···—···	Heavy Diesel	34	0·9155
— + — + — +	Industrial Diesel	40	0·8930
— o — o — o —	Pool gas oil	49	0·8495
- - - - - - - - - - -	Heavy boiler fuel oil	—	0·9450

Test conditions:

Engine speed, 1250 r.p.m. Oil inlet temperature, 60° C.
20 in. Hg. boost, 30° C. I.A.T. Jacket inlet temperature, 70° C.
Maximum pressure limited to 1100 lb. per sq. in. at 150 lb. per sq. in. B.M.P.

Fig. 10.8 shows load-range curves under supercharged conditions on various heavy fuels, and fig. 10.9 the general shape of the cylinder-pressure diagrams for these same fuels.

From these figures it will be noted:

(*a*) That the performance under supercharged conditions is virtually the same for all the fuels tested, despite very wide variations in specific gravity, volatility, and cetane number. The point of just visible exhaust varies only 6 per cent over the extreme range.

(*b*) Although on a basis of lb. per B.H.P. hour the specific consumption varies; when plotted on that of the lower calorific value of the fuel in each case, the consumptions are identical within the limits of observation, excepting only that of the Admiralty fuel oil (30 per cent gas-oil and 70 per cent residual) which is a little greater, more especially at the top end of the load range.

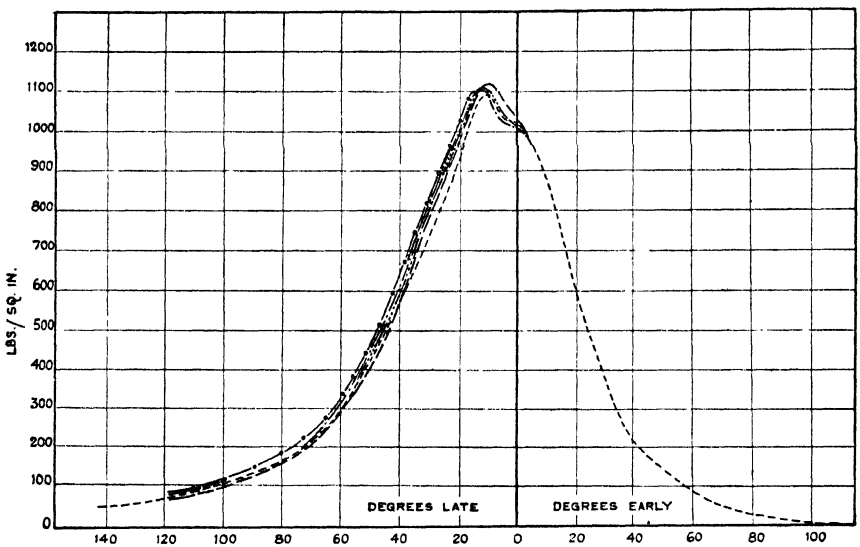

Fig. 10.9.—Fuel tests (cylinder-pressure diagrams) on E18/1 Comet Mark III engine, bore 5 in. × stroke 5½ in.

Fuels:

		Cetane No.	Sp. Gr. at 15° C.	B.M.P. lb./in.²
— · — · — · —	Heavy Diesel	38	0·9145	151·0
— — — — —	Marine Diesel	43	0·8730	150·0
— · · · — · · · —	Heavy Diesel	34	0·9155	155·5
— + — + —	Industrial Diesel	40	0·8930	152·0
— o — o — o	Pool gas oil	49	0·8495	150·4
- - - - - - - - - - - -	Heavy boiler fuel oil	—	0·9450	151·0

Test Conditions:

Engine speed, 1250 r.p.m. Oil inlet temperature, 60° C.
20 in. Hg. boost, 30° C. I.A.T. Jacket inlet temperature, 70° C.
Maximum pressure limited to 1100 lb. per sq. in. at 150 lb. per sq. in. B.M.P.

Fig. 10.10 and fig. 10.11 are similar curves to the above but at a lower speed and can be compared with fig. 10.12 and fig. 10.13 which are taken at the same speed but in the unsupercharged condition.

From the figures it will be seen that when running unsupercharged the performance on the same group of fuels differed widely. In most cases the running was very rough and noisy, and in that of the Admiralty fuel oil the exhaust was smoky throughout the entire range, misfiring occurred at light loads and the engine would not run idle.

All the evidence confirms that the reduced delay period and improved combustion are a function of pressure rather than of temperature, though both play a part.

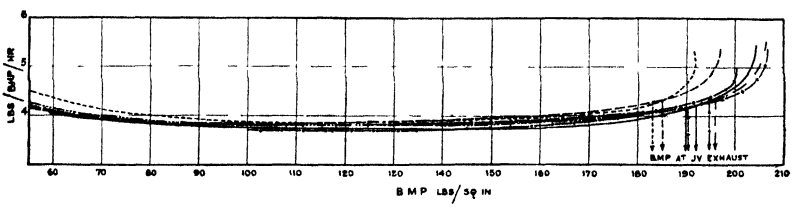

Fig. 10.10.—Fuel tests (load-range curves) on E18/1 Comet Mark III engine, bore 5 in. × stroke 5½ in.

Fuels:

		Cetane No	Sp Gr at 15° C.
———	Light boiler oil	41	0·9120
— · — · — · —	Heavy Diesel	38	0·9145
— · · · — · · · —	Heavy Diesel	34	0·9155
— — — — —	Marine Diesel	43	0·8730
— + — + — +	Industrial Diesel	40	0·8930
— o — o — o —	Pool gas oil	49	0·8495
· · · · · · · · · · · ·	Heavy boiler fuel oil	—	0·9450

Test conditions:

Engine speed, 500 r.p.m.
20 in. Hg. boost, 30° C. I.A.T.
Oil inlet temperature, 60° C.
Jacket inlet temperature, 70° C.

Fig. 10.14 shows the improvement in economy and reduction in exhaust temperature to be obtained by intercooling from 90° C. to 60° C. and 30° C.

Fig. 10.15 shows the reduction in the heat loss to the jacket with intercooling.

From this it will be noted that the effect of reducing the supercharge air temperature by 60° C. by intercooling is to reduce the heat flow to the pistons, cylinder walls, etc., from 365 to only 240 B.Th.U. per minute or to less than two-thirds and, as a result, to reduce the specific fuel consumption from 0·43 to 0·39 lb. per B.H.P. hour when operating at a brake mean pressure of 150 lb. per sq. in. at 500 r.p.m.

This, of course, is a somewhat extreme case for, at the very low revolution speed of 500 r.p.m., the effects of heat loss are magnified.

Fig. 10.14 shows that a similar reduction in the supercharge air temperature serves to reduce the exhaust temperature from 515° C.

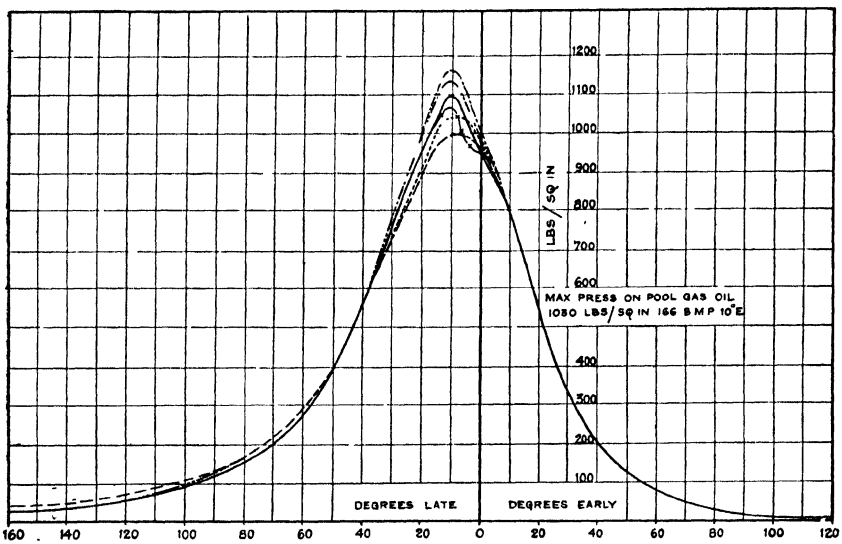

Fig. 10.11.—Fuel tests (cylinder-pressure diagrams) on E18/1 Comet Mark III engine, bore 5 in. × stroke 5½ in.

Fuels:

		Cetane No.	Sp Gr. at 15° C.	B M P lb./in.²
————————	Light boiler oil	41	0·9120	162
— · — · — · —	Heavy Diesel	38	0·9145	160
— · · · — · · · —	Heavy Diesel	34	0·9155	160
— — — — —	Marine Diesel	43	0·8730	160
— + — + — +	Industrial Diesel	40	0·8930	161
· · · · · · · · · · · ·	Heavy boiler fuel oil	—	0·9450	161

Test conditions:

Engine speed, 500 r.p.m.
20 in. Hg. boost, 30° C. I.A.T.
Oil inlet temperature, 60° C.
Jacket inlet temperature, 70° C.

to 410° C. when operating at a brake mean pressure of 150 lb. per sq. in. at 1250 r.p.m. In this case, owing to the higher revolution speed, the effect of the reduced heat losses on thermal efficiency is, of course, less pronounced, but even so the specific fuel consumption is reduced

from 0·385 to 0·366 lb. per B.H.P. hour; the maximum cylinder pressure is, however, increased by about 5 per cent.

At all speeds, and more especially at low revolution speeds, viz. down to 20 per cent of the normal maximum, the running under supercharge is quite remarkably smooth.

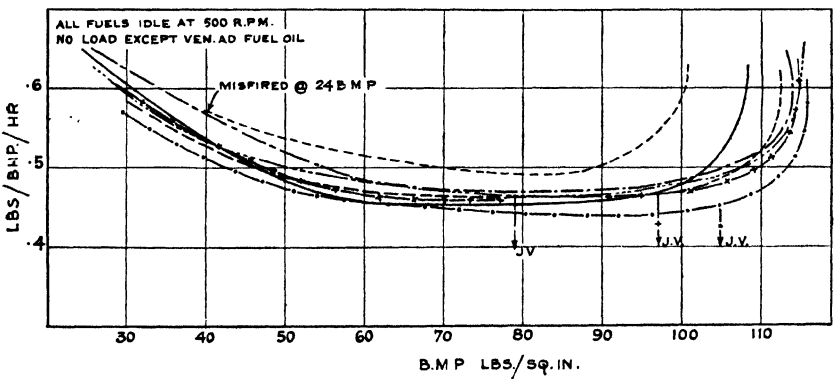

Fig. 10.12.—Fuel tests (load-range curves) on E18/1 Comet Mark III engine, bore 5 in. × stroke 5½ in.

Fuels:

		Cetane No.	Sp. Gr. at 15° C.
————————	Light boiler oil	41	0·9120
— · — · — · —	Heavy Diesel	38	0·9145
— ··· — ··· —	Heavy Diesel	34	0·9155
— — — — —	Marine Diesel	40	0·8930
— o — o — o —	Pool gas oil	49	0·8495
- - - - - - - - - - - -	Heavy boiler oil	—	0·9450

Test conditions:

Engine speed, 500 r.p.m. Oil inlet temperature, 60° C.
Zero boost, 30° C. I.A.T. Jacket inlet temperature, 70° C.

Exhaust blue-grey over load range except for the three fuels where just visible exhaust limits are shown

Throughout the whole speed range the increase in I.M.E.P. is slightly, and in B.M.E.P. at the clean exhaust limit is considerably, greater than the increase in density of the supercharge air. The former is to be accounted for, in part, by the ability, under supercharged conditions, to consume a slightly greater proportion of the air retained in the cylinder, but mainly by the higher thermal efficiency at which it is consumed, and the latter by the higher mechanical efficiency.

The B.M.E.P., at the clean exhaust limit when running unblown at a speed of 1250 r.p.m. and with 30° C. air intake temperature, is 115 lb. per sq. in. From fig. 10.14 it will be seen that the B.M.E.P. at the same speed and air intake temperature, but when supercharged to a pressure of 20 in. Hg., is 220 lb. per sq. in. (ratio of intake pressure and density, 1·66 : 1; ratio of B.M.E.P., 1·92 : 1).

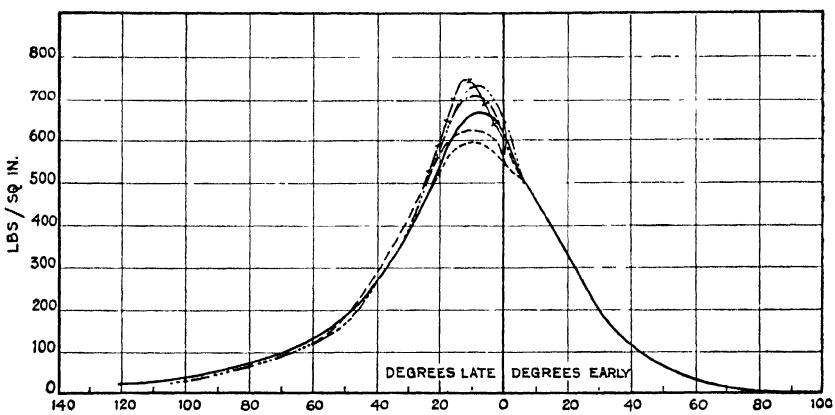

Fig. 10.13.—Fuel tests (cylinder-pressure diagrams) on E18/1 Comet Mark III engine, bore 5 in. × stroke 5½ in.

Fuels:

		Cetane No.	Sp. Gr. at 15° C.	B.M.P. lb./in.²
————————	Light boiler oil	41	0·9120	72·0
—·—·—·—	Heavy Diesel	38	0·9145	73·0
—···—···—	Heavy Diesel	34	0·9155	68·0
— — — — —	Marine Diesel	43	0·8730	72·7
— + — + — +	Industrial Diesel	40	0·8930	70·5
- - - - - - - - - - - -	Heavy boiler fuel oil	—	0·9450	71·0

Test conditions:

Engine speed, 500 r.p.m. Oil inlet temperature, 60° C.
Zero boost, 30° C. I.A.T. Jacket inlet temperature, 70° C.

At the same intake air temperature the relative heat losses to the cooling water diminish with increased density at about the same rate as with increased speed, under naturally aspirated conditions, i.e. if the power output be doubled either by doubling the density of the air or by doubling the engine speed at atmospheric density, the flow of heat to the cylinder walls, pistons, etc., is substantially the same, provided the air temperature is maintained constant.

In a high-speed, high-compression engine of normal design, little, if anything, is to be gained by cylinder scavenging, since the inlet and exhaust valves are in such close proximity that overlap results merely in short-circuiting. When account is taken of the loss of air (on which work has been done in the blower) and the necessary distortion of the combustion space in order to accommodate the valve overlap, the net

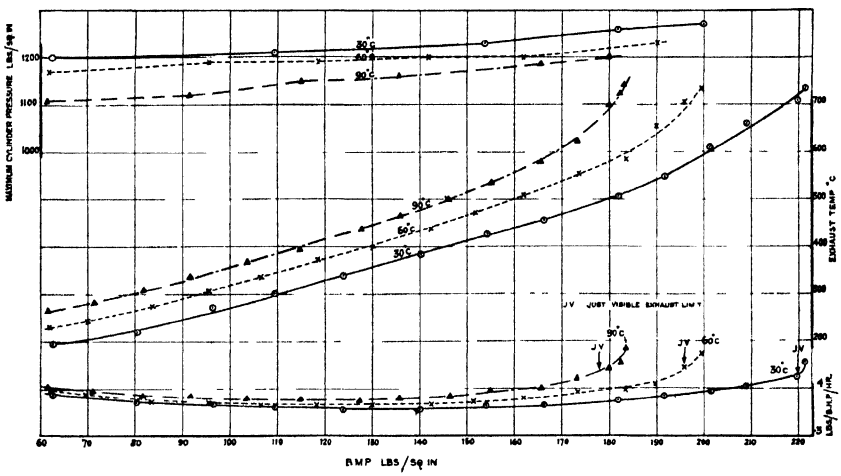

Fig. 10.14.—Effect of intercooling on consumption, exhaust temperature and maximum cylinder pressure, using E18/1 single-cylinder 4-stroke Comet Mark III engine, bore 5 in. × stroke $5\frac{1}{2}$ in.

Test conditions:

Engine speed, 1250 r.p.m.
Air intake temperatures 30°, 60°, 90° C. at 1·66 atmospheres absolute.
Oil inlet temperature, 60° C.
Jacket inlet temperature, 70° C.

Fuel:

Heavy Diesel oil, sp. gr. 0·9145 at 15° C.

result is generally negative. No measureable reduction in piston temperature could be observed even with very wide overlaps, involving a considerable loss of air. It would seem that it is only when an exhaust turbo-driven supercharger is employed that scavenging by valve overlap can be justified, and then primarily as an expedient to reduce the exhaust temperature to a figure acceptable to the turbine. Even so, the practice of short-circuiting some air to exhaust, outside the cylinder, and under either governor or thermostatic control, so that it occurs only when the exhaust temperature exceeds a safe limit, is probably much to be preferred. Clearly the higher the degree of supercharge, the more costly the loss of air by scavenging or short-circuiting.

Reference again to fig. 10.14 will emphasize the important effect of air intercooling upon the exhaust temperature. With air at 90° C., i.e. no intercooling, an exhaust temperature of 600° C. is reached at a B.M.E.P. of 169 lb. per sq. in.; with intercooling down to 30° C. a B.M.E.P. of just over 200 lb. per sq. in. can be reached at the same exhaust temperature, or, conversely, at say 170 lb. per sq. in. B.M.E.P., intercooling from 90° C. to 30° C. lowers the exhaust temperature by 140° C.

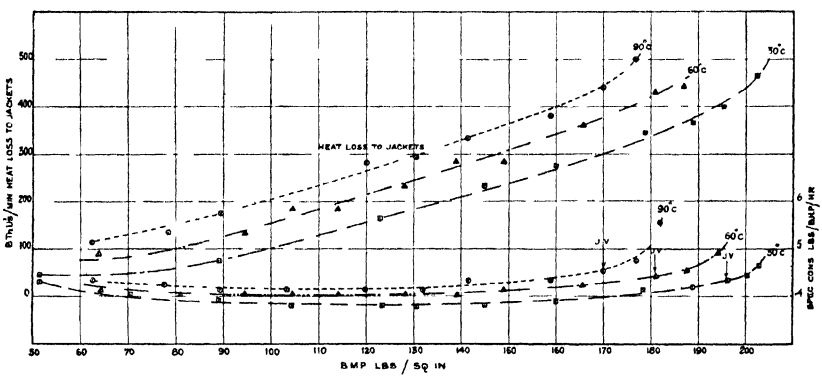

Fig. 10.15.—Effect of air intake temperature on fuel consumption and heat loss to cooling water, using E18/1 single-cylinder 4-stroke Comet Mark III engine, bore 5 in. × stroke 5½ in.

Test conditions:

Engine speed, 500 r.p.m.
20 in. Hg. boost, 30°, 60°, 90° C. I.A.T.
Oil inlet temperature, 60° C.
Jacket inlet temperature, 70° C.

Fuel.

Heavy Diesel oil, sp. gr. 0·9145 at 15° C.

After taking all the relevant factors into consideration, it would seem that, for an engine of normal design and proportions, and having a compression ratio high enough to run satisfactorily without supercharge, the optimum degree of supercharge lies between 1·5 and 2·0 atmospheres absolute. Below 1·5 atmospheres it is doubtful whether in the case of a small engine, i.e. below about 100 h.p., the gain will fully justify the extra cost and complication, while above 2·0 atmospheres the high maximum cylinder pressures will call for a more robust design of engine. If the supercharge can be available at all times, and under all conditions of load and speed, then a lower ratio of compression can safely be used and a higher supercharge permitted within the same limits of maximum pressure. This appears, in any case, to be an essential condition if difficult fuels are to be used.

Comparison of Direct versus Indirect Injection under Supercharged Conditions

Under normally aspirated conditions, the indirect-injection units with compression swirl of the " Comet Mark III " type have a higher fuel consumption of the order of 5 per cent to 10 per cent due to higher

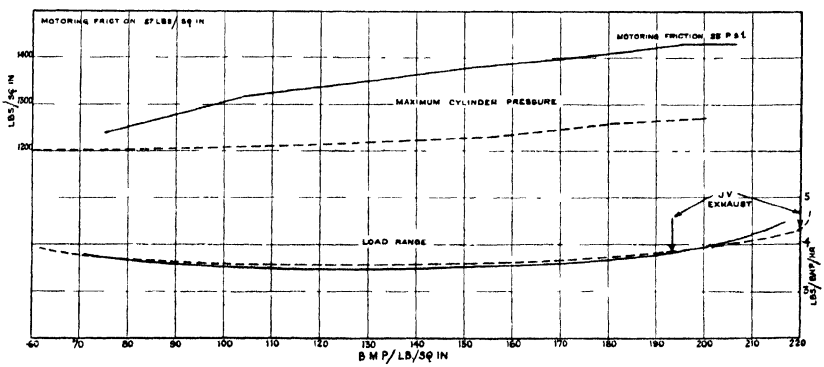

Fig. 10.16.— Comparison of load-range and maximum cylinder-pressure curves of Comet Mark III and direct-injection combustion systems

Test conditions:

Engine speed, 1250 r.p.m.	Oil inlet temperature, 60° C.
20 in. Hg. boost, 30° C. I.A.T.	Jacket inlet temperature, 70° C.

Key:

— · — · — · — Direct-injection engine.
— — — — — — Comet Mark III engine.

relative heat losses, but develop from 10 per cent to 15 per cent more power at the clean exhaust limit than the direct-injection type with induction air-swirl due to better air utilization.

Under supercharged conditions the relative heat losses of both types are less and the difference in thermal efficiency is much reduced until at 2 atmospheres abs. the gap in thermal efficiency is almost closed.

Thus fig. 10.16 shows comparative performance curves of the " Comet Mark III " and the D.I. systems under supercharged conditions at 1250 r.p.m.

CHAPTER XI

The Two-cycle Engine

In the case of the compression-ignition engine in which the cylinder is charged with air only and therefore in which some wastage of the charge can be tolerated, the use of the two-stroke cycle is extremely attractive; more especially in those applications where the revolution speed is limited either by circumstance or convention and where the load factor is fairly high, e.g. for marine propulsion, stationary-engines, etc.

In favour of the two-stroke engine it can be argued:

(1) A greater power output can be obtained from the same total weight and bulk of ironmongery than from an unsupercharged four-cycle engine.

(2) For the same turning moment, only half the number of cylinders, fuel pumps, and injectors is required. This argument, however, is sometimes more apparent than real, for in applications where good dynamic balance is essential, the need for dynamic balance largely determines the minimum number of cylinders that can be used, unless resort be had to additional dynamic balancers—an added complication.

(3) The absence of reversals of loading on the bearings leads to a smoother and quieter-running engine, but it can lead also to trouble with the gudgeon-pin bearings.

(4) In its simplest expression, namely the crankcase compression version, the two-cycle engine has the very minimum number of working parts but also the minimum number of virtues.

In the four-cycle engine the same moving parts perform alternately the functions of generating power and of emptying and filling the cylinder. The former requires that they shall be massive enough to withstand the very high pressures and intense heat flow to which they are subjected; it requires also that they shall be armed with adequate piston-rings to ensure gas-tightness, all of which conditions impose a heavy burden, both of friction losses and of dynamic loading, on the bearings. The latter function, that of emptying and filling the cylinder, could be served adequately by extremely light moving parts, which need not necessarily be reciprocating, and by reason of the low pressures involved, they need no sealing rings.

Thus in the four-cycle engine we are incurring in emptying and filling the cylinder an altogether disproportionate amount of friction. This consideration is apt to be forgotten when comparing two- and four-cycle engines. In the latter case, it is usual to express the losses between the piston crown and the engine flywheel in terms of friction losses and fluid-pumping losses—the latter being assessed from light-spring indicator diagrams and representing therefore the air work only, but to this should be added nearly half of the total internal friction incurred during the process of emptying and filling the cylinder; not quite half because, during the idle strokes, the piston-rings are not loaded with gas pressure nor are the bearings subjected to quite so high a loading. It seems probable that about 40 per cent of the total mechanical friction of a four-cycle engine should be debited against the emptying and filling process.

In the case of two-cycle engines, and more especially when an independent blower is used, it is usual to debit the process of emptying and filling the cylinder with the whole of the blower work, both air-handling and internal friction combined.

In the two-cycle engine the heavy moving parts are devoted solely to generating power, the purpose for which they are designed, while the function of emptying and filling the cylinder is performed by an independent set of moving parts, adapted solely for that purpose and therefore with much lower friction losses.

On the other side of the picture the two-cycle engine generally requires about 40 per cent to 50 per cent more air for the same power output and therefore the air-pumping work, as distinct from the friction entailed by the pumping mechanism, will be correspondingly greater.

Again, in the two-cycle engine some part of the total piston stroke must be sacrificed to the function of emptying and filling the cylinder; just how much is a matter of compromise, depending on the general type and design of the engine and the intended speed of operation, but at best it must be at least 10 per cent and is generally nearer 20 per cent. Yet again in the two-cycle, the time available for emptying and filling the cylinder is considerably less than in the four-cycle, viz. about 33 per cent as against 50 per cent of the complete cycle. We have then to force into or through the cylinder a greater weight of air in a shorter time, and this, of course, entails more air-handling work. It must be borne in mind also that the pressure required to force, at every cycle, a given weight of air through a port or valve of given size, increases as the square of the speed, and the power expended as the cube of the speed.

If now we compare the two, we find that in the case of the four-cycle, the indicated work done in emptying and filling the cylinder is very small, even at high speeds, but, on account of the dispropor-

tionately high mechanical friction involved, the total effective work is quite large, but friction losses do not increase with speed at anything approaching the same rate as fluid-pumping losses.

We may conclude therefore that the overall work done in emptying and filling the cylinder should be less in a two-cycle engine at low speeds, but greater at high speeds, and that it assumes a prohibitively large proportion of the engine's power when both engines are run at the highest speed consistent with mechanical safety or durability.

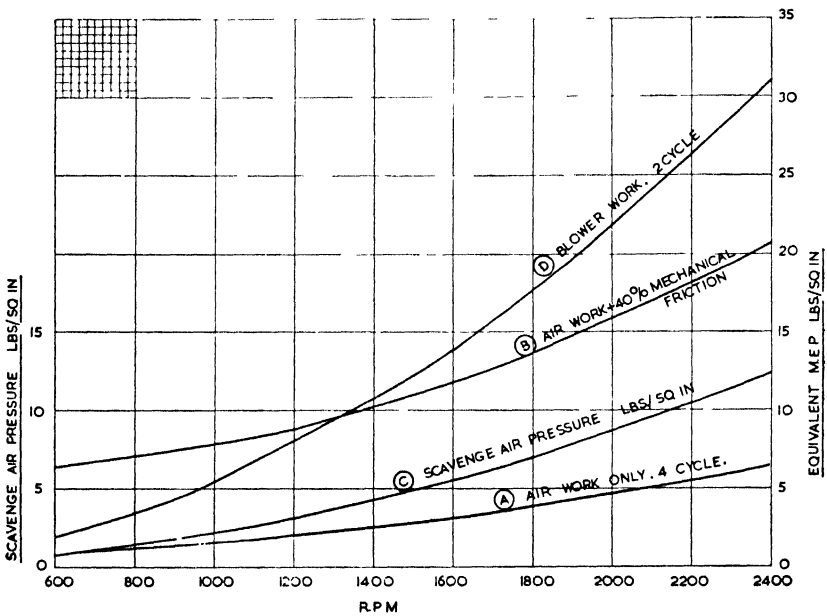

Fig. 11.1.—Comparison curves of work done in emptying and filling the cylinders of typical two- and four-cycle engines of the same power

(A) 4-cycle engine; air-pumping work only. Volumetric efficiency 80 per cent at N.T.P.
(B) 4-cycle engine; air-pumping work + 40 per cent of mechanical friction.
(C) 2-cycle engine; scavenge air pressure (lb. per sq. in.).
(D) 2-cycle engine; total blower work allowing for 50 per cent excess air, i.e. 1·2 swept volumes at N.T.P. and assuming an overall blower efficiency of 60 per cent.

The curves, fig. 11.1, show very approximately the order of magnitude of the work done in emptying and filling the cylinders of typical two- and four-cycle engines of the same power, viz. about 30 B.H.P. per cylinder over the speed range 600–2400 r.p.m.

It will be noted that the curves of power consumption cross over in the region of about 1300 r.p.m. and that thereafter that of the two-cycle walks away very rapidly.

If all other conditions were the same, then it would follow that the full-load fuel consumption of the two-cycle should be lower than that

of the four-cycle at speeds below the intersection point of the two curves and higher above the intersection, rising to about 15 per cent higher at the highest speed. This latter would be a heavy handicap even if both engines were operated always at full load, but at reduced loads the comparison becomes even more unfavourable, for the energy expended in emptying and filling remains unchanged while its proportion increases alarmingly.

The curves shown in fig. 11.1 may be regarded as typical of the general trend, but both the absolute values and the intersection point will of course vary considerably depending upon the type and design of the two-cycle engine. For example the pumping losses can be reduced considerably if a greater proportion of the effective stroke is sacrificed, but this has its limitations, for it is the expansion stroke that must suffer the greater curtailment, hence, by so doing, we shall lose both thermal efficiency and effective cylinder capacity.

Much depends also on the arrangement of porting or valving of the cylinder, on the type of blower or scavenge pump employed and on the efficiency of scavenging, but although all these factors may tend to move the intersection point one way or the other, they cannot shift it very far and the general tendency must remain. From this we may conclude that, given equally good combustion conditions and an equal ratio of expansion, the full-load overall efficiency of the two-cycle should be better than that of the four-cycle at low or moderate revolution speeds but that at high speeds, and more especially at high speeds and light loads, the two-cycle must always be at a disadvantage and would appear to be unsuitable for such services as road transport, where these conditions prevail.

The ultimate power output of any internal-combustion engine, whether two- or four-cycle, is a function of the weight of air it can inhale and retain in its cylinder. In the four-cycle compression-ignition engine of the orthodox poppet-valve type, because of the very small clearance space and the necessity for avoiding any pockets in the combustion space, the valves must be situated in the cylinder head and within, or overlapping only very slightly, the cylinder bore; thus the breathing capacity of the engine is limited by these geographical considerations.

When two valves only are employed the maximum breathing capacity is, in practice, such as to limit the useful piston speed to about 2000 ft. per min., that is to say above this speed, the volumetric efficiency begins to fall steeply due to wire-drawing, and the performance of the engine deteriorates rapidly, but the limit is strictly one of piston, not of revolution, speed.

When multiple valves are employed this limit can be raised to well over 2500 ft. per min. if full advantage is taken of the multiplicity of valves, but in practice other mechanical limitations usually inter-

vene to set a limit to the piston speed which can safely be allowed. It is therefore only when the mechanical design of the engine as a whole is such as to permit of very high piston speeds, or when the high piston speed is required for short periods only, that the use of multiple valves becomes essential. Thus the limiting power output of the unsupercharged four-cycle engine is determined by its breathing capacity in terms of piston, but not of revolution, speed. In the two-cycle engine with piston-controlled ports the reverse is the case and the limit of power, as determined by breathing capacity, is controlled by the revolution speed and not by piston speed.

Consider the case of two otherwise similar two-cycle engines, one with a stroke equal to the cylinder diameter and the other with a stroke of double this diameter. In both cases the depth of the ports is equal to, say, 15 per cent of the stroke; then in the case of the long-stroke engine the depth and therefore also the area of the ports will be double that of the short-stroke and the breathing capacity will be double. So far, therefore, as breathing capacity is concerned, and in the case of the two-cycle it is the deciding factor, both engines could run at the same revolution speed even though the piston speed of the long-stroke engine be double that of the short-stroke. If now we accept for the moment that breathing capacity sets the limit to the power output of both the two- and the four-cycle C.I. engines, then it follows that if we double the stroke of the two-cycle we shall still be able to run at the same revolution speed and shall develop double the power, but if we double that of the four-cycle, the valve area will remain unchanged, and we shall, if we are running to the limit of our breathing capacity in both cases, have to reduce the revolution speed to one-half and so shall obtain no more power; there is therefore every incentive to employ the longest possible stroke-bore ratio in the case of the two-cycle but little or none in that of the four-cycle. Thus, on the score of breathing capacity, it is the cylinder diameter and the cylinder diameter alone which determines the ultimate power output of the four-cycle engine, but that of the two-cycle is determined by the cylinder volume. In the case of the two-cycle, whatever the type or form, breathing capacity is in practice the actual limiting factor, but in that of the four-cycle other mechanical limitations usually intervene before the limit of breathing capacity is reached.

In practice the stroke-bore ratio of both two- and four-cycle engines is controlled largely by design considerations, which will be discussed in more detail later on, but it is unfortunate that these considerations tend to discourage the use of a long stroke in the case of most forms of two-cycle engine. For example, it is essential that the cylinder ports in a two-cycle engine shall not be uncovered by the lower end of the piston. This means that in most cases the length of the piston skirt must be somewhat greater than the stroke of the piston. Again with a

long stroke and a long piston the connecting-rod will foul the mouth of the cylinder unless it also be made very long and so on.

The Loop-scavenged and Uniflow Engines

The possible forms of two-cycle engine may be divided generally into two groups:

1. Those in which a single working piston controls both the inlet and exhaust ports, usually termed *loop-scavenged engines.*

2. Those in which the inlet and exhaust are at opposite ends of the cylinder, usually termed *uniflow engines.*

The latter may be subdivided into further groups:

(*a*) Those in which two pistons are used, one controlling the inlet and the other the exhaust.

(*b*) Those in which a single piston is used to control the inlet, and one or more poppet valves in the cylinder head to control the exhaust—in some cases this may be reversed and the piston used to control the exhaust.

(*c*) Those in which a single sleeve-valve is used to control both the inlet and exhaust at opposite ends of the cylinder. These are shown diagrammatically in figs. 11.2 to 11.5.

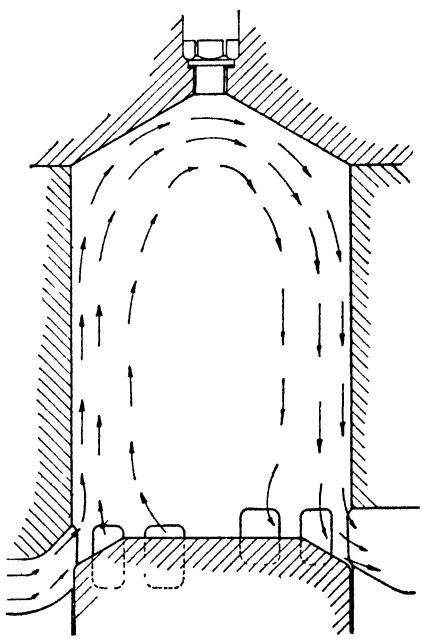

Fig. 11.2.—Single-piston loop scavenge

Let us consider first the loop-scavenged engine, fig. 11.2; here, since one piston controls both sets of ports, it follows that both must be at or about the same level and that the aggregate width of all the ports must be something less than the circumference of the cylinder. For the sake of the piston-rings it is, of course, necessary to provide guide bars between the ports and to limit the width of each individual port to that which the rings can pass over without risk of bulging or breaking. In practice the minimum aggregate width of such bars is about 25 per cent of the circumference of the cylinder leaving only 75 per cent available for the inlet and exhaust combined. The depth of the ports in all cases is determined by the proportion of the stroke we are prepared to sacrifice in favour of breathing capacity. In all cases, too, we must provide that the exhaust ports shall open first, and that with a sufficient lead to allow of the pressure in the cylinder falling to, or very nearly to, that

of the scavenge air pressure before the inlet ports are opened. In the case of the loop-scavenged engine where a single piston controls both

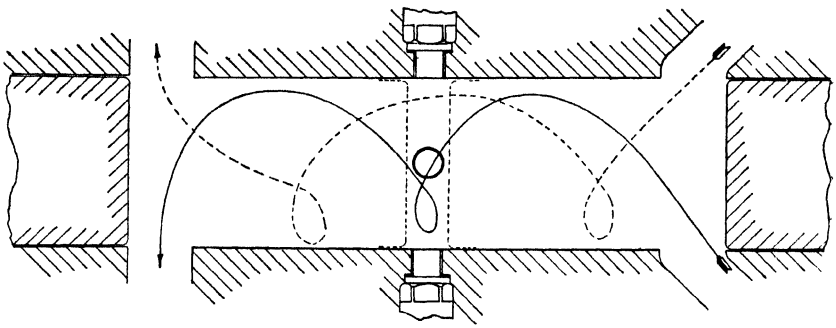

Fig. 11.3.—Double opposed-piston uniflow scavenge

sets of ports, all the functions must be symmetrical about the bottom dead centre which means that if the exhaust ports are deeper and open first they must also close last, unless we are prepared to introduce some form of control valve behind either the inlet or exhaust ports.

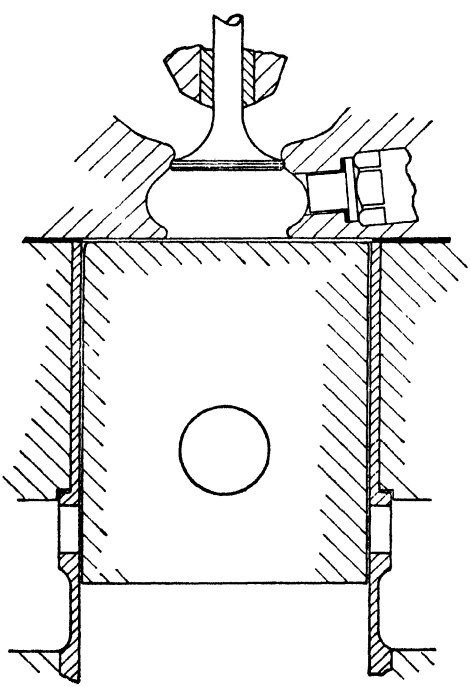

Fig. 11.4.—Single-piston uniflow scavenge

In the case of uniflow engines, we have two rows of ports, for each of which 75 per cent of the cylinder circumference is available, thus doubling the available port area. We have also the advantage that we are not confined to symmetry and can arrange for the exhaust ports to open ahead of the inlet and still close at the same time, or earlier if we so desire.

When two pistons are used, one controlling the inlet and one the exhaust ports, fig. 11.3, we can obtain the necessary exhaust lead by arranging the cranks out of phase, thus giving the exhaust piston a lead over the inlet.

When a single piston is used with cam-operated poppet valves, fig. 11.4, we are of course free to adopt any relative timing we choose.

When a sleeve valve is used to control both sets of ports, fig. 11.5, we are almost equally free, since we can adopt any phase relation between the motion of the sleeve and that of the piston. In all cases the period of opening of the inlet ports is and must be less than that of the exhaust, which is one argument, when poppet valves are used, for using them as exhaust valves, for even with multiple poppet valves, it is not possible to provide a port area equal to that afforded by 75 per cent of the cylinder circumference.

In the case of the sleeve-valve two-cycle engine we can exhaust over the top of the sleeve and so employ the full 100 per cent of the circumference; thus we can provide both a greater exhaust area, and at the same time and for the same reason, reduce the lead of exhaust over inlet and so increase either the inlet period or the expansion ratio.

Of the three types of uniflow engine, the sleeve-valve version has the greatest breathing capacity, can therefore run the fastest, and has the highest specific output. The double-piston engine comes next, and the single-piston poppet-valve version third.

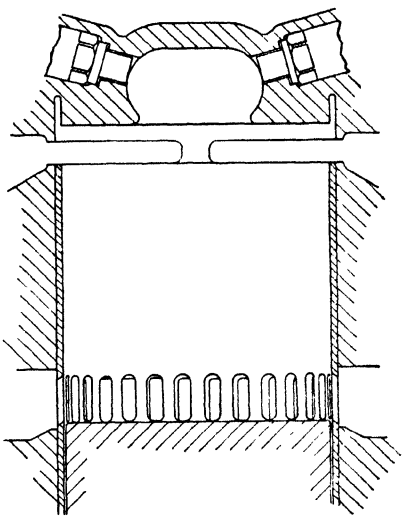

Fig. 11.5.—Single-piston sleeve-valve engine uniflow scavenge

Of all the possible types of two-cycle engine the loop-scavenge has the advantage of mechanical simplicity, but on account of its limited port area, is restricted to a comparatively low speed and specific power output. The double-piston uniflow engine has the advantage of a much greater port area, in fact just double the breathing capacity, and can therefore run at a much higher speed and specific power output. It has the advantage also that the mechanical design allows of the use of a long stroke but it is open to the objection that either the second piston must be connected to the crank by long return connecting-rods, which involves a three-throw crank for each cylinder and extends greatly the cylinder centres, or two crankshafts must be used coupled together by a long train of gearing or by some other means. In the latter case it is difficult to give the exhaust piston adequate lead without introducing serious torsional problems. Yet another alternative is the ∩-shaped cylinder, fig. 11.6, which is really the cylinder of the opposed-piston engine bent round at the centre through 180° thus providing two parallel cylinders with a common combustion chamber. The two

pistons can then be connected either to a single crankshaft with two crankpins phased about 15° apart or they can each be connected to separate crankshafts geared together.

This form is hardly practicable for a C.I. engine because of the difficulty of reconciling adequate passage-way for the scavenging air with a small enough clearance volume.

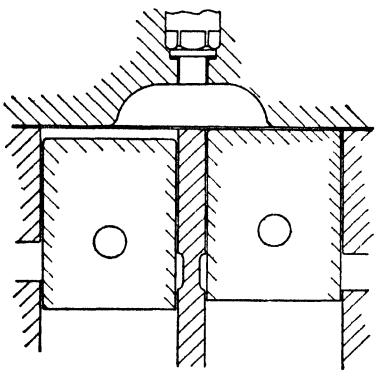

Fig. 11.6.—∩-type double-piston uniflow scavenge

The single-piston poppet-valve engine provides a satisfactory solution from a mechanical point of view, but owing to the limited area of opening of the poppet valves, its speed and specific power output is less than that of the double-piston engine.

The sleeve-valve uniflow two-cycle engine, with the sleeve driven direct from an eccentric on the crankshaft, has the advantage of mechanical simplicity about midway between that of the loop-scavenge and the poppet-valve uniflow and has shown itself capable of developing the highest specific power output of any form of two-cycle C.I. engine, but it is as yet in an early experimental stage, and much further development work is necessary before it can begin to be regarded as a competitive engine.

Scavenging

The process of emptying and filling the cylinder of a two-cycle engine is generally referred to as *scavenging*, though scavenging, as such, represents but one phase of it. In reality there are three distinct phases:

(1) *Exhaust.* During this phase the exhaust ports or valves are open to atmosphere, the pressure in the cylinder is released and falls rapidly to that of the scavenge pressure or below.

(2) *Blow through.* During this phase both inlet and exhaust ports are open together and the air from the blower has a free passage through the cylinder, driving the residual exhaust products ahead of it; this is the true scavenging phase.

(3) *Supercharging.* During this period the exhaust ports or valves are closed but the inlet still open; the pressure in the cylinder then builds up to that of the delivery or scavenging air pressure. Fig. 11.7 shows a typical light-spring indicator card taken from a very high-speed two-cycle sleeve-valve uniflow engine on which are marked also the time of opening and closing of the inlet and exhaust ports.

Let us consider these phases a little more closely:

During phase (1) when the exhaust alone is open, the pressure within the cylinder falls rapidly and, in the ideal condition, should have fallen to that of the scavenging air pressure by the time that the inlet ports are opened. If it has not fallen sufficiently then exhaust products will be discharged from the inlet ports also, and so will mix with and contaminate the incoming air. Clearly, however, the rate of

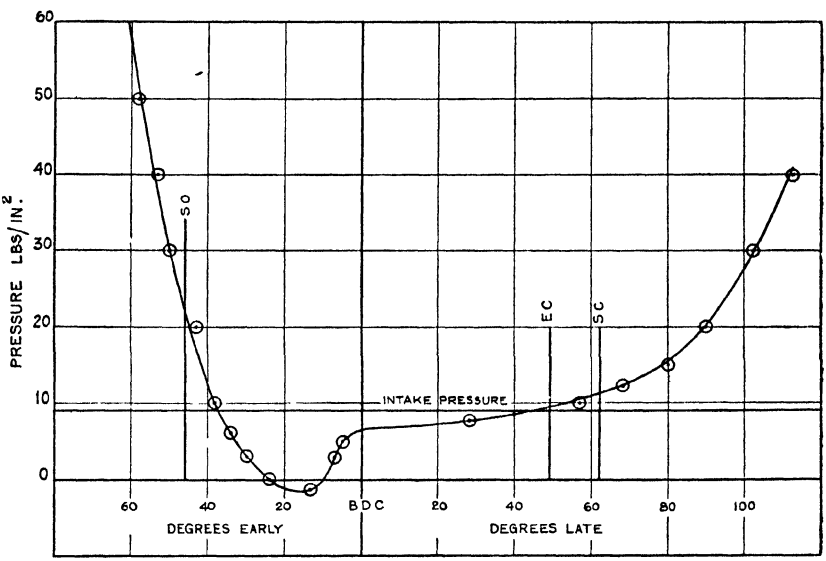

Fig. 11.7.—Cylinder light-spring diagram from sleeve-valve uniflow engine

Test conditions:

Sleeve lead, 16°.
Port timings: E.O. 81° E; S.O. 46° E; E.C. 49° L; S.C. 62° L.
Engine speed, 2750 r.p.m.
1·6 swept volumes air at N.T.P.
Scavenge air pressure, 18 in. Hg; temperature, 55° C.
Exhaust release pressure, 130 lb. per sq. in.
B.M.E.P., 177 lb. per sq. in.

fall of pressure for any given opening of the exhaust ports will vary both with the load and the speed of the engine and it is for the designer to arrive at the best general compromise as to the amount of lead he gives to the exhaust.

In practice, owing to the very sudden release, more especially when piston- or sleeve-controlled ports are used for the exhaust, the pressure in the cylinder invariably falls momentarily to much below that of the scavenging air, even though the inlet ports are already opening; this momentary depression is followed by a resurgence back into the cylinder from both the inlet and exhaust ports, but mainly from the

exhaust, which at this moment are much the wider open of the two. In other words, some of the exhaust gases bounce back into the cylinder and this takes place to a greater or lesser extent whatever the lead of exhaust over inlet. This momentary backwash of exhaust products into the cylinder is not necessarily objectionable, since they are driven out again during the second or blow-through phase, but it must have the effect of altering profoundly the flow pattern within the cylinder and probably accounts for the discrepancies so frequently found between static model tests of scavenging efficiency and actual running experience.

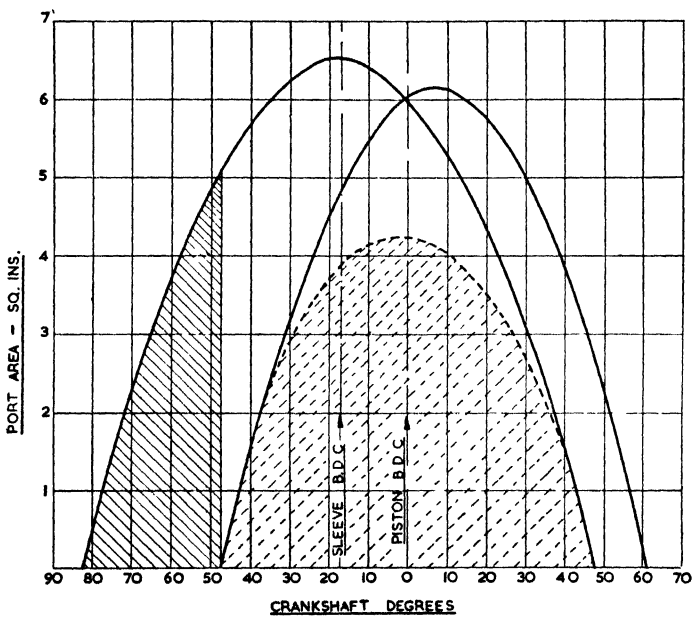

Fig. 11.8.—Port-opening diagram showing exhaust lead and blow-through area

During phase (2), the blow-through period, the air has a free passage direct through the cylinder but is impeded by the resistance offered by two sets of ports in series. The pressure required to propel a given weight of air through the cylinder in a given time will be determined solely by the combined effective area of the two ports in series; the larger this area, the lower the pressure required. It is therefore the combined time-area of the two sets of ports in series, and not of either individually, which determines the scavenge pressure needed and therefore the power expended on emptying and filling.

During the early portion of the blow-through period the exhaust ports will be wide open, but the inlet only partially so, hence the main restriction will be on the inlet side, and the mean pressure in the cylinder

will be only slightly above that of the atmosphere or of the exhaust system. During the latter portion, the available inlet area will exceed the exhaust, and it will be the latter which will offer the most resistance, hence the pressure in the cylinder will build up to much more nearly that of the scavenge air.

Fig. 11.8 shows a typical port-opening diagram and in dotted lines the actual blow-through area.

Our aim during this, the true scavenging phase, is to drive the exhaust products out of the cylinder with the least possible effort and the least possible loss of air. It is conceivable that we could have the following extremes:

(*a*) Complete stratification, in which case there would be no admixture of the air and residual exhaust gases; the entering air would then act as a piston driving the exhaust before it and in this, the ideal case, one cylinder volume of air would displace all the exhaust and leave the cylinder full of pure air.

(*b*) Complete diffusion when the air, as it enters, mixes completely with the residual exhaust products; then of one cylinder

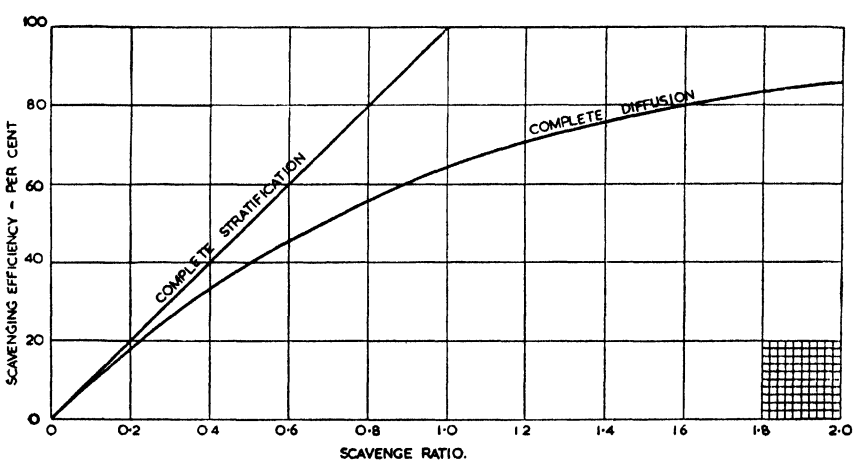

Fig. 11.9.—Scavenging efficiency assuming (*a*) complete stratification, (*b*) complete diffusion

volume of air delivered to the cylinder approximately 62 per cent will be retained; if 1·5 volumes are delivered this figure will be increased to 79 per cent and so on (see fig. 11.9).

(*c*) Complete short-circuiting when all the air delivered to the cylinder escapes through the exhaust ports or valves without displacing any of the exhaust, and none is retained in the cylinder.

The above are extreme conditions but there are others also to be taken into account; for example, let us suppose that there were no

blow-through period at all, as would be the case if the exhaust ports were closed before the inlet had opened, then owing to the cooling and contraction of the residual exhaust products, some air would be drawn into the cylinder even without the help of a blower. This of course is an extreme, not a practical, condition, but the effect of loss of heat by the residual exhaust gases to the cylinder walls will be appreciable, while that of the interchange of heat between the exhaust gases and the air, though not affecting the density of the totals, will alter the volumetric proportions to the extent that the contraction by volume of the residual exhaust will induce a corresponding volume of air.

Again, exhaust pipe surges, due either to normal resonance or to the direct effect of the initial discharge of exhaust from another cylinder sharing a common manifold, may have a profound effect, for good or ill, on the movement or dispersal of the incoming air during the blow-through period, and much can be done by appropriate tuning in the case of engines running at constant or nearly constant speed.

Yet again the motion of the residual exhaust gases will affect profoundly that of the incoming air. It has been shown earlier that, for satisfactory combustion in a C.I. engine, an orderly and rapid movement of the air, generally in the form of rotary swirl, is essential. Such movement persists throughout the expansion stroke, and is still continuing when the inlet ports open, so that the entering air meets, and its path is influenced, and probably influenced very profoundly, by such residual motion. Thus a change in air movement designed to improve combustion may well result in a deterioration of the scavenging efficiency or vice versa. It is small wonder, therefore, that the design of an efficient two-cycle compression-ignition engine is still largely a matter of guess-work and its development a process of trial and error.

With regard to (3), supercharging, if the inlet ports are allowed to remain open for a short period after the exhaust ports are closed, then any further air delivered to the cylinder during this phase will be entrapped and retained. In ordinary circumstances, however, the amount that can enter during phase (3) is small because the time interval is very short and the residual pressure in the cylinder at this period is rising rapidly, due to the upward movement of the piston, and is already nearly equal to that of the scavenging air. It is probably only when separate-phased scavenge pumps are employed that any appreciable supercharge can be gained during this phase.

An ingenious form of supercharging has been adopted in the single-piston loop-scavenged engines developed by Messrs. Crossley Bros. Ltd. and known as *exhaust-pulse supercharging*. In this case a suitable number of cylinders share a common exhaust manifold. An excess of scavenge air is supplied and a considerable amount is allowed to spill out of the exhaust ports, only to be slammed back again at the last moment, by the sudden pressure rise in the manifold caused by the

exhaust from another cylinder in the group. By such means it has been found possible to provide a very considerable supercharge without any expenditure of otherwise useful energy, and without any additional ironmongery.

Scavenging Efficiency

It is always a difficult matter to arrive at the efficiency of scavenging of a two-cycle engine and nearly impossible in that of a compression-ignition two-cycle because of the existence of two large unknown quantities, viz.

1. The weight of air actually retained in the cylinder, and
2. The proportion of the retained air consumed by the fuel.

The second of these unknowns can, however, be almost eliminated by operating the engine as a spark-ignition engine, and scavenging with an accurately measured and ready-mixed charge of gas or fuel vapour and air. If the charge be over-rich in fuel, we can ensure that virtually all the oxygen retained in the cylinder is consumed, and the indicated mean pressure will, under these conditions, afford at least a reasonably true relative, if not absolute, measure of the scavenging efficiency.

Such experiments as the author has carried out in this manner indicate that the efficiency of the scavenging process is considerably lower than is usually supposed or claimed. In the case of loop-scavenged engines it frequently lies well below that which would be attained on the assumption of complete diffusion, and in the case of uniflow engines, only slightly above but, in all cases, far below that to be expected on the assumption of complete stratification; nor, in the case of uniflow engines, does there appear to be any marked advantage, on the score of scavenging efficiency, from the use of a long stroke-bore ratio, which again indicates that diffusion rather than stratification is the general rule.

For example, experiments carried out in this manner on three otherwise identical uniflow sleeve-valve engines, all of the same cylinder diameter, viz. 5 in., but with stroke-bore ratios respectively of 0·9, 1·15, and 1·3, showed the same scavenging efficiency in all three cases; that is to say, when operated as spark-ignition engines, all three engines gave, within plus or minus 1·5 per cent, the same indicated mean effective pressure at the same speed, when scavenged with the same proportion of air at the same temperature and pressure.

Types of Blower

The air for scavenging and charging two-cycle engines may be supplied by blowers of various forms or by individual pistons phased to deliver air to each cylinder while the inlet ports of that cylinder are open.

It may be supplied also by using the underside of the working piston as a compressor. This, though the simplest of all possible methods, is the least efficient and the least satisfactory. Not only is the volume of air displaced too small, but it is compressed at the wrong time and its density is reduced by heat from the working piston; further it is extremely difficult to prevent the crankcase oil passing into the working cylinder along with the air. It suffices for small light-duty spark-ignition engines where low first cost is the prime consideration but, though still used to a limited extent, it cannot be considered seriously as a satisfactory means of supplying air to compression-ignition engines.

The various types of blower available are:

1. The centrifugal blower driven either mechanically or by an exhaust turbine.
2. The Roots type.
3. The eccentric-vane type.
4. The reciprocating-piston type.

The Centrifugal Blower. This type is attractive where large powers are concerned in that it is small, light, and compact, and, moreover, its delivery-pressure characteristic over the speed range corresponds approximately with the requirements of the engine. In large sizes its adiabatic efficiency is fairly high, viz. in the region of 70 per cent to 80 per cent, and its mechanical friction very low. The principal objections to its use are:

(*a*) That to deliver the pressure required it must run at a very high speed; this involves step-up gearing in at least two stages, which is liable to be both noisy and expensive.

(*b*) Its efficiency in small sizes is low and its cost, including the gearing, relatively very high. We may therefore rule it out of consideration for engines of less than, say, 200 B.H.P.

The centrifugal or axial-flow blower may, of course, be driven by means of an exhaust turbine, for there is energy enough and to spare in the exhaust to provide the power needed, while the exhaust temperature of a two-cycle engine is suitable for the turbine. This arrangement has the advantage that the need for gearing is eliminated, while the work of emptying and filling the cylinder is accomplished by the utilization of energy that otherwise would be wasted, but it does not solve the problem completely because:

(*a*) It cannot come into operation until the engine is under way; hence some other and additional form of blower must be provided for starting purposes.

(*b*) Under rapidly varying loads or speeds, there will always be a time lag in the response of the turbine-driven blower.

The Roots Type. This has the advantage of being a positive displacement blower with very low, almost negligible, mechanical friction. It has the advantage also of operating at a reasonably low speed and can therefore be driven from the engine through single-step gearing or, in some cases, by belt; moreover, it is fairly inexpensive to produce. It has the advantage, too, of requiring no internal lubrication and therefore will deliver oil-free air.

The disadvantages of this type are that having no internal compression, its adiabatic efficiency is low except at very low pressures, while its internal leakage path is very wide and the sealing length very short. Where pressures of the order of 2 to 4 lb. per sq. in. will suffice it serves well, but both air work and internal leakage render it unsuitable for the higher-pressure ranges. It is best suited therefore for comparatively low-speed, two-cycle engines.

There has been developed comparatively recently a modified version known as the Lysholm which embodies internal compression and for which very high efficiencies are claimed. If and when this can be produced at a reasonable price it should prove a very suitable type for high-speed two-cycle or supercharged four-cycle engines.

The Eccentric-vane Type. A great many versions of this general type have been developed; compared with the Roots type it has the advantage of internal compression and therefore a much higher air efficiency, but the disadvantage that, having a number of reciprocating vanes, its mechanical friction is considerably greater than, and its internal leakage nearly as great as, the Roots. Moreover, the reciprocating vanes call for internal lubrication. It is probably, on the whole, the more suitable type for pressure ranges of, say, 4 to 8 lb. per sq. in., i.e. for high-speed two-cycle and supercharged four-cycle engines.

Piston Type. The piston type has the advantage both of internal compression and of the least possible leakage loss, but the disadvantages of this type are:

(*a*) Its mechanical friction is relatively high, even though the moving parts can be made very light.

(*b*) For its capacity it is relatively bulky compared with blowers of the rotary type.

(*c*) The reciprocating piston requires balancing.

(*d*) Some form of valve gear is needed.

This type is used largely for low-speed two-cycle engines in cases where the lack of balance is not felt and where automatic valves will suffice.

It has the highest adiabatic efficiency and smallest internal leakage of any type, more especially in the higher pressure ranges, but its speed of operation is generally restricted by the use of automatic valves. A positive valve gear of the rotary or piston-valve type can, of course, be

provided but this adds considerably to both its bulk and complexity. It is possible that with the exercise of some ingenuity a single sleeve-valve version might be produced wherein the sleeve serves both to balance dynamically the piston and to control positively the inlet and delivery ports. If such could be achieved it might then serve as a very effective form of blower both for high-speed two-cycle and for supercharged four-cycle engines.

All the above types have been considered from the point of view of delivering a bulk supply of air to a group of cylinders. There remains the alternative of using a separate piston blower, or displacer, for each cylinder, so phased that the bulk of its delivery stroke will take place during the time that the inlet ports of the working cylinder are open.

This method has some very real advantages, more especially when applied either to small engines, or when the actual number of cylinders is small.

(*a*) The charge of air delivered to each cylinder at each cycle is metered accurately and positively, and is not influenced by surges in the pipe system, etc.

(*b*) The volume of air delivered during the early part of the blow-through period when wastage is most liable to occur is limited to that displaced by the pump piston at this phase of the cycle.

(*c*) The net air work done per cycle in charging the cylinder is reduced substantially.

(*d*) When the number of working pistons is insufficient to provide a dynamic balance, the displacer pistons may be suitably weighted to serve also as balancers.

(*e*) In the case of relatively small engines the cost of the mechanism involved is less than that of a separate blower.

Fig. 11.10 shows a cross-section of an experimental two-cycle C.I. engine with a phased piston blower, serving also as a dynamic balancer.

Comparison of Two-cycle C.I. Engine with Supercharged Four-cycle Engine

The obvious counterpart to the two-cycle is the supercharged four-cycle engine which, in its poppet-valve form at all events, it resembles closely; it will therefore be appropriate at this stage to compare the virtues and vices of the two, and for this we will assume that the four-cycle is supercharged to the extent that the power output of both engines is the same throughout the speed range, i.e. that at all speeds the mean pressure of the four-cycle is double that of the two-cycle.

The supercharged four-cycle starts with the important advantage that for the same specific power output it requires only about 70 per cent as much air, and hence can do with a correspondingly smaller blower, but on the other hand, that air has to be handled twice, first in

the blower and again in the main engine cylinders during the emptying and filling portion of the cycle. In the two-cycle engine the whole of the air-charging process is carried out while the piston is hovering at or about bottom centre; hence none of the work put into the blower is returned as useful work on the piston. In the four-cycle engine the charging process takes place while the main piston is descending, and a portion at least of the work put into the blower is returned, by pneumatic transmission, as useful work on the main piston. How large a proportion depends, of course, upon the efficiency of the blower as a compressor, and that of the engine as a motor, both of which will vary according to circumstances, but, under reasonably favourable conditions, somewhere about 40 per cent of the work put into the blower will be returned to the engine crankshaft. Taking this into account the equivalent net air work, in the case of the supercharged four-cycle engine, is $70 - (0{\cdot}4 \times 70)$, or only 42 per cent of that of a two-cycle engine when both are operating at the same intake pressure. Against this must be offset the higher mechanical friction entailed in the four-cycle due to the double handling of the air.

In the case of the two-cycle, which is virtually an open orifice during the blow-through period, the pressure required to charge the cylinder at low speeds is quite low but increases as the square of the speed. In that of the four-cycle, which is a positive metering device, the pressure required at the blower delivery, to supply the same weight of air per cycle, is constant throughout the whole speed range. Hence, at low speeds, the two-cycle will score by virtue of the much lower air pressure and lower friction losses even though the weight of air to be handled is much greater. At high speeds, when the intake pressures are the same, the four-cycle will score by reason of the much smaller air work involved, and the two curves will once again intersect as in fig. 11.1, but at a somewhat different point.

Once again we come to the conclusion that, other things being equal, the overall performance of the two-cycle should be better than that of the supercharged four-cycle at low speeds and high loads, but inferior at high speeds and light loads. Moreover, the supercharged four-cycle can run without any supercharge at light loads, while the two-cycle requires its supply of scavenging air at all times and under all conditions.

CHAPTER XII

Mechanical Design Part—I

In the design of any high-speed internal-combustion engine, structural rigidity is always the first consideration, for on this depends not only the smoothness of running, but also the durability of the wearing parts.

In effect this means that we must aim to keep the engine as short as possible, consistent with the provision of adequate bearing surfaces for the crankshaft and adequate cooling of the cylinders and cylinder heads.

The next factor to bear in mind is that the fatigue strength of the materials in use is much their most important characteristic.

In the author's belief, it is generally best to examine the various factors in relation to some typical, though hypothetical, example rather than in the abstract. From the arguments that emerge, it will be apparent how these should be modified to apply to any other specific case or type of service.

By far the majority of all high-speed internal-combustion engines are employed for road transport, and since this is both the most general, and, in some respects, the most difficult duty they are called upon to perform, we will choose, as our example, an engine destined for this service.

Since the compression-ignition engine, with its high gas pressures is, from a mechanical point of view, the more difficult problem, we will choose that in preference to a petrol engine.

Let us assume, then, that we are called upon to design an engine for, say, a large motor-coach. Figs. 12.1 and 12.2 show longitudinal and transverse sections of an experimental engine of this class which is, in the main, fairly representative of the type and size of engine in question.

For the service we have in mind we shall have to try and fulfil the following requirements:

(1) A maximum power output of, say, 130 B.H.P.

(2) A high torque at low engine speeds for the sake of good acceleration and " hanging-on " during hill climbing.

(3) The engine must be as light and compact as possible consistent with low manufacturing costs.

(4) It will be expected to run at least 5000 hours without receiving anything other than perhaps a top overhaul.

(5) It must be as silent as possible and maintain its silence throughout the period between overhauls.

(6) Since it will be operating in a highly competitive field, low fuel consumption will be a factor of the very first importance.

(7) In this service, the engine will be called upon to operate over the widest possible range of speed, and constantly to dodge from one extreme of speed or torque to the other. At one moment it may be idling, at the next developing full torque at low r.p.m., and at the next at the maximum r.p.m., and so on, but its mean duty, in terms of engine running hours, will probably be about 30 per cent of the maximum torque at about 70 per cent of the maximum r.p.m.

The first point we have to decide is the total cylinder capacity we shall require in order to give us a maximum power of 130 B.H.P. within the clean exhaust limit, and this, in turn, will depend upon both the breathing capacity we can provide, upon the maximum speed at which we can safely run with due regard to durability and reliability, and to the maintenance of a reasonably high mechanical efficiency.

Breathing Capacity

In a compression-ignition engine it is very desirable to avoid the existence of any pockets in the combustion space to which the fuel spray cannot reach or from which the air cannot readily be brought into contact with the fuel spray. This means, in practice, that the valves must be vertical and that the valve heads must, if possible, lie within the bore of the cylinder. So long, therefore, as we adhere to the use of two valves only per cylinder, their diameter will be restricted by this geographical limitation. Again, in order to avoid the risk of the cylinder head cracking between the two valve seatings, the valves must be far enough apart to admit of a free circulation of water between them. These considerations mean, in practice, that the sum of the diameters of the two valve heads must not exceed about 85 per cent of the cylinder bore and that of the valve throats 73 per cent, for, on the grounds of durability, we cannot afford to use very narrow valve seats.

If we elect to adopt direct injection with a central or nearly central injector, it is clear that the available valve area will be further reduced and, in that event, we should perhaps be well advised to employ four valves per cylinder. We will, however, assume that in this example we are going to employ compression-induced swirl, in which case the injector will be banished well away from the valves, and the figures of 85 and 73 per cent of the cylinder bore are based on this assumption.

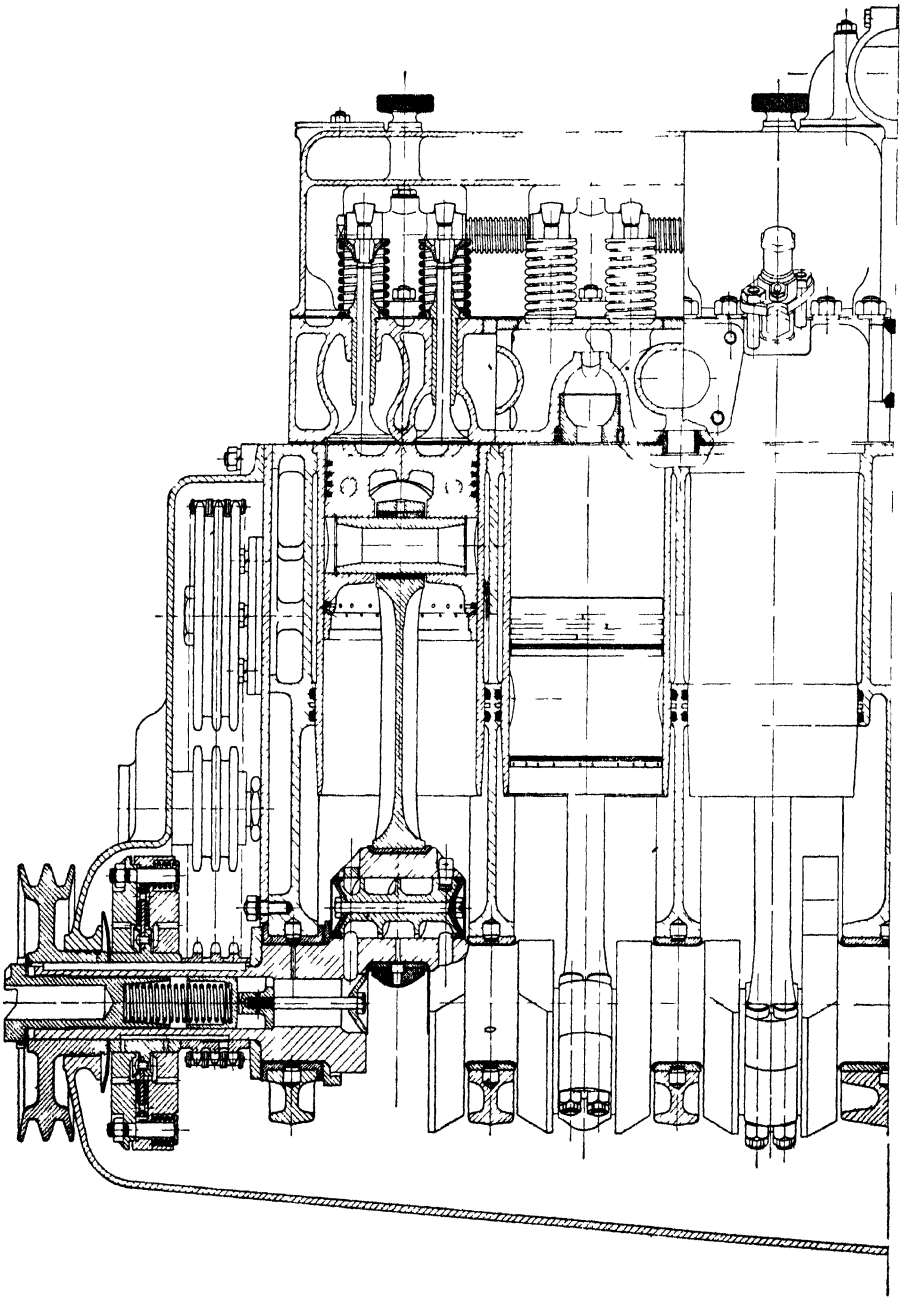

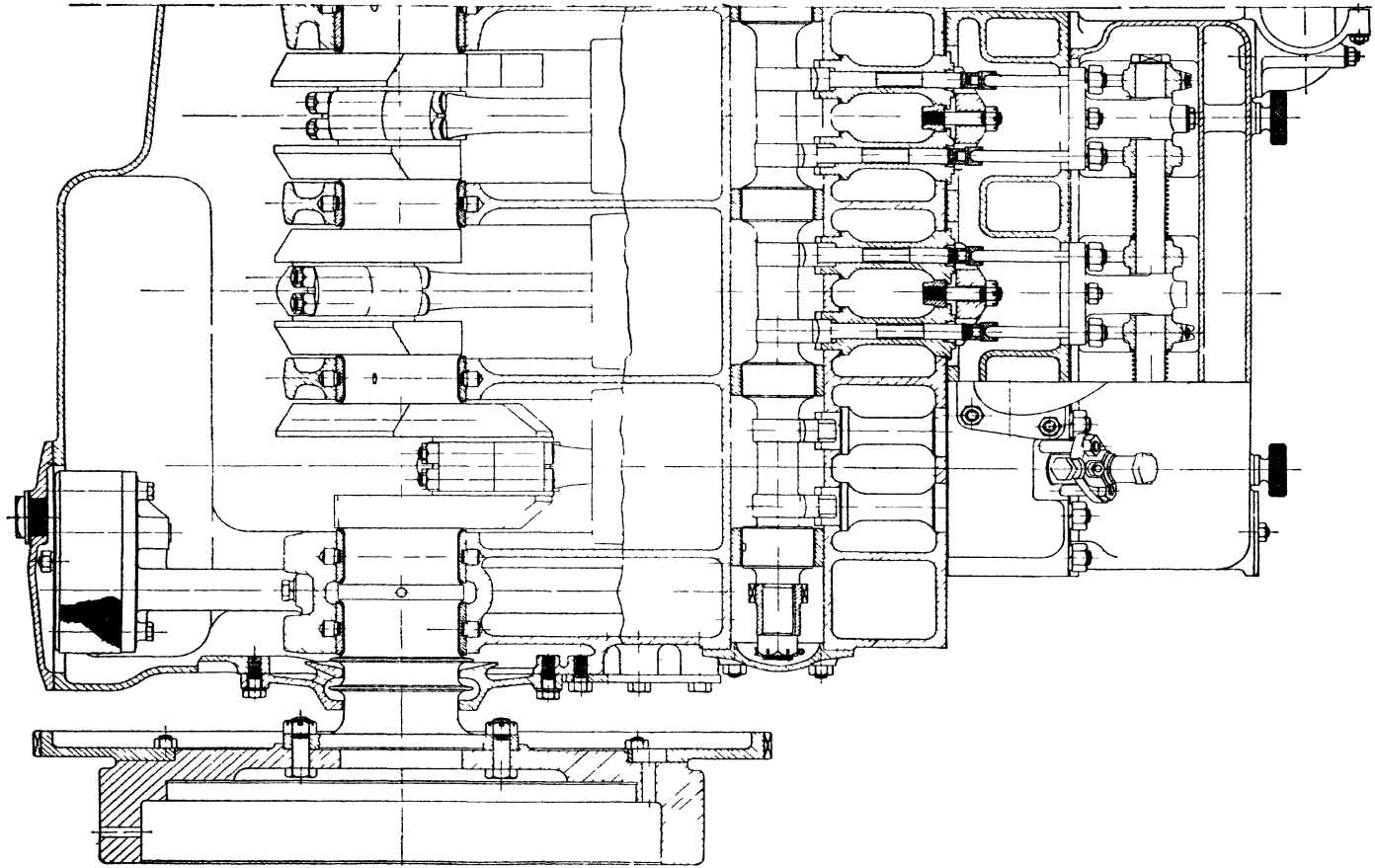

Fig 12 1 —Longitudinal section of experimental 6 cylinder C I engine, bore 4¾ in , stroke 5½ in.

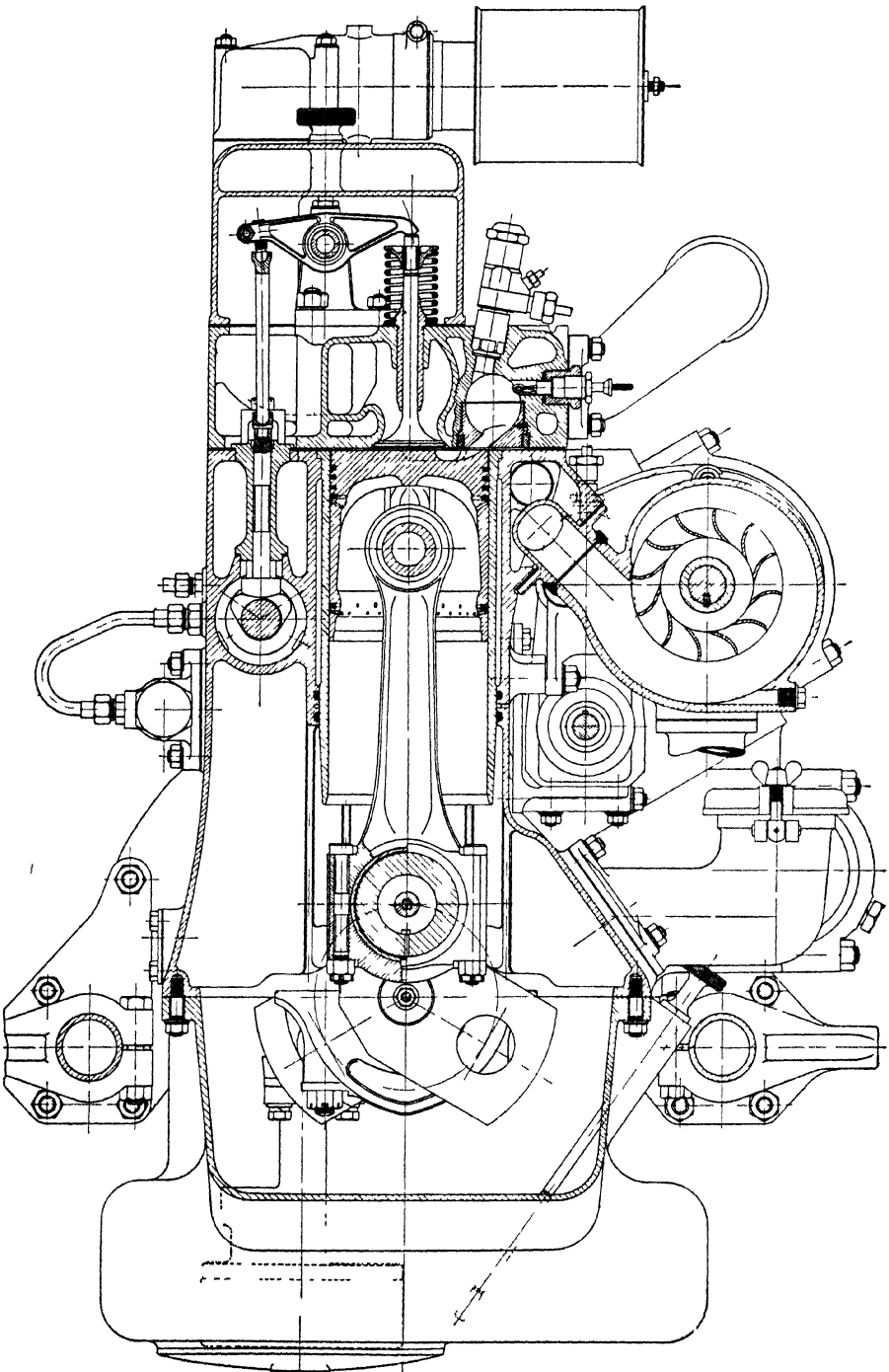

12.2.—Cross-section of experimental 6-cylinder C.I. engine, bore $4\frac{3}{4}$ in., stroke $5\frac{1}{2}$ in.

It is customary and convenient to reckon the valve throat diameter as the inside diameter of the actual valve seating. It has been found good practice, however, to form the inlet passage immediately above the valve head as a venturi, whose minimum diameter is less than the valve throat. This serves to straighten up the flow of air and to ensure the efficient utilization of the whole circumference of the valve, thus, in effect, increasing substantially the orifice coefficient of the valve (see fig. 12.3). Experience has shown that the throat of the venturi may be only about 80–85 per cent of the throat diameter of the inlet valve, without imposing any measurable restriction on the air flow, or rather that the gain, due to the more uniform distribution of flow round the valve, is greater than the restriction imposed by the throat of the venturi.

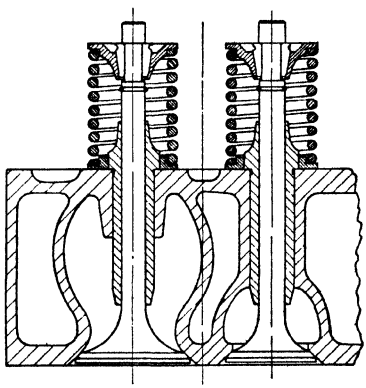

Fig. 12.3.—Inlet valve port with venturi throat

When, however, we are considering breathing capacity, it is the area of the actual valve throat and not that of any venturi passage situated behind the valve that we must take into account, just as in a petrol engine we reckon the breathing capacity in terms of the valve-throat area rather than that of the carburettor choke—in this case, however, the two are situated far apart and there is no risk of confusion.

Whether we elect to employ direct injection or compression swirl we could, as an extreme measure, allow the valves to overlap the cylinder bore. This is bad from a combustion point of view, because it involves leaving air pockets at the sides of the piston, and therefore quite out of reach of the fuel spray (see fig. 12.4). It is still worse from a mechanical point of view in that it involves gashing out the cylinder bore for a depth slightly greater than the lift of the valve. Where no renewable liner is used, or where a very thick wet liner is employed, this is possible but objectionable. When very thin liners either of the wet or dry type, or a chromium-plated bore, are used, it becomes virtually impracticable on mechanical grounds alone.

We are not bound, of course, to make both valves of the same diameter, for the exhaust gases are forced positively out of the cylinder by the piston; also they are helped out by the kinetic energy of the column of gas set up by the first outrush of high-pressure exhaust.

In the case of the inlet valve we have only the normal atmospheric pressure to force air into the cylinder, and cannot afford to restrict its entry any more than we can possibly help.

Taking these considerations into account, we can afford, therefore,

to make the area through the inlet valve about 50 per cent greater than that through the exhaust. We arrive, then, at the conclusion that the maximum diameter of inlet-valve throat, which is the prime factor controlling the breathing capacity, is limited to approximately 40 per cent of the cylinder bore, and its area to 16 per cent, or 1/6·25 of the piston area. In order to take full advantage of the available throat area, the lift of the valve should be at least 30 per cent of the throat diameter and, if possible, slightly more, for though at a lift of 25 per cent the circumferential area is equal to that of the throat, the orifice coefficient continues to improve with increasing lift; moreover, of course, the valve is not at full lift all the time.

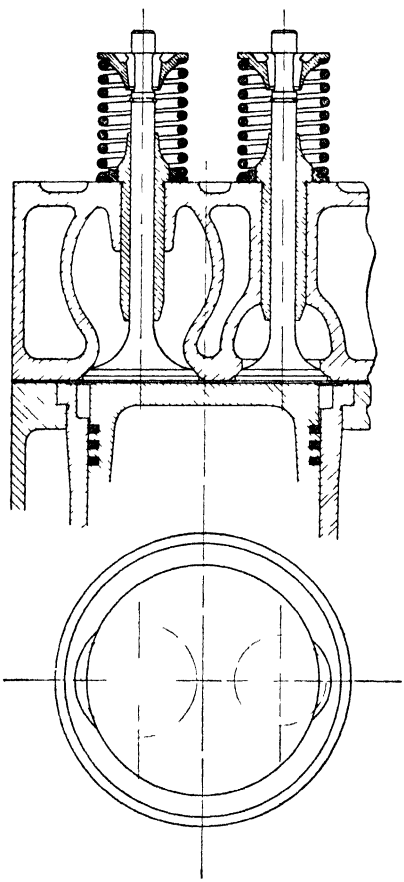

Fig. 12 4 —Section of cylinder head of a C I. engine showing valves overlapping the cylinder bore

With the largest valve-throat area we can provide without overflowing the cylinder bore, and with a valve lift great enough to take full advantage of this area, the mean gas velocity through the inlet valve will be 6·25 times that of the piston. Now with normal valve timing, the relation between mean gas velocity and volumetric efficiency will be found, as shown in the graph, fig. 12.5, from which it will be seen that the volumetric efficiency is at a maximum when the mean gas velocity is in the region 120 to 160 feet per second, but begins to fall rather steeply when it reaches 210 feet per second. These are somewhat higher figures than we should get in a petrol engine, but it must be remembered that, in the latter case, the needs of carburation and distribution compel us both to provide some measure of pre-heating of the carburetted air charge, and to add further restrictions to the entry of the air in the way of a relatively small choke tube in the carburettor, and a somewhat restricted cross-sectional area of induction pipe. In the case of the C.I. engine we need no pre-heating and no other restriction in series with the inlet valve.

We can trick this curve to some extent by extending the period of

inlet opening to give a higher volumetric efficiency at the high-speed end, but only at the cost of that at the low-speed end of the range, and this, of course, is just what we should do in the case of a marine or aircraft engine, but since, in this service, low-speed torque is one of the important requirements, we cannot afford to give away any performance at the lower end of the speed range.

In the case of the spark-ignition engine, falling-off in volumetric efficiency entails, of course, a corresponding falling-off in the indicated mean pressure, until a point is reached on the speed curve where the

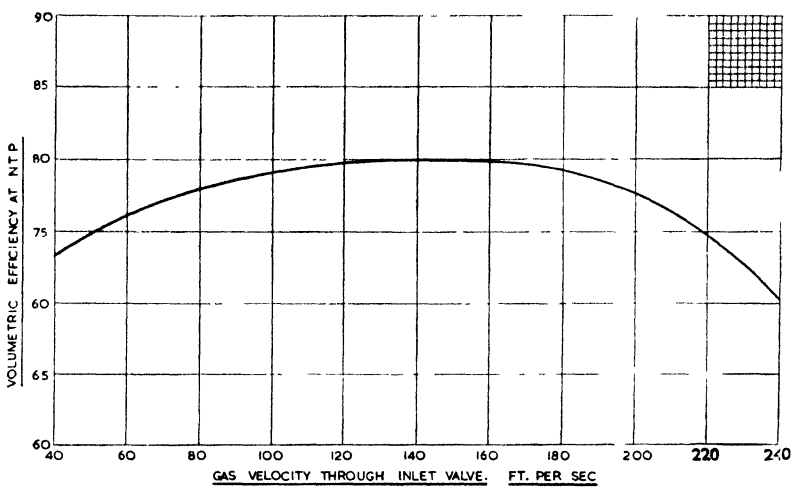

Fig. 12.5.—Curve of volumetric efficiency at N.T.P. against mean gas velocity through inlet valve. Ambient temperature, 20–22° C. (70° F.)

rising mechanical losses, combined with the falling volumetric efficiency, set a limit to the maximum power output, and this occurs generally at a mean inlet gas velocity of about 240 to 260 feet per second, depending upon the mechanical efficiency. Again, in the case of the petrol engine, owing to the larger capacity of the combustion chamber, we have much more latitude and can allow the valves to overlap the cylinder bore or place them at any angle to the centre line of the cylinder without detriment to the combustion efficiency. In the case of the C.I. engine, the practical limit occurs much earlier because:

(1) The mechanical losses in general are higher.

(2) We cannot, on the grounds of good combustion, allow the density of the air charge to fall below a certain limit.

(3) With a steeply falling air volumetric efficiency it will be difficult to avoid over-fuelling, for the natural tendency of the fuel-injection pump is that of a rising volumetric efficiency with speed.

We have, therefore, as far as possible, to match the volumetric efficiency curves of the engine as an air pump and that of the injection pump, and this we can do with a reasonable degree of compromise up to a gas velocity of about 210 feet per second, but thereafter they begin to separate widely.

Fig. 12.6 shows typical relative volumetric efficiency curves for a compression-ignition engine, plotted against mean gas velocity through the inlet valve. By closing the air inlet valve earlier or later, we can swing the air curve about a fulcrum point, in the region of 100 feet per second, but our scope is very limited. By varying the capacity or

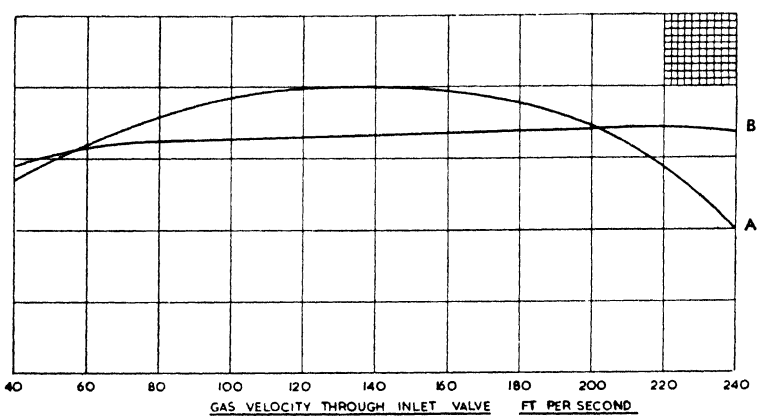

Fig. 12.6.—Relative volumetric efficiency curves of (A) the engine as an air pump and (B) the fuel pump

loading of the drawback valve on the fuel injection pump, we can swing its delivery curve in somewhat the same manner, but again to a limited extent only.

By careful proportioning we can maintain a reasonably close relationship between the maximum fuel delivery and the air up to somewhere between 200 and 220 ft. per second, but thereafter the two curves tend to diverge sharply, and any further increase in speed will result in over-fuelling.

In order to prevent this we must employ some form of governing which will cut down automatically the fuel delivery as soon as the engine reaches a certain limiting speed. Such a governor may be contrived to cut it down progressively following the slope of the air volumetric efficiency curve or, as is more usual, to cut it down fairly steeply at the upper limit of engine speed. In most cases the latter is preferable, for there are usually some mechanical reasons, such as the incidence of crankshaft torsional oscillation, valve bounce, etc., which render it undesirable to run the engine at higher speeds, while in any case the

rapidly mounting mechanical losses with increase of speed will impose a heavy handicap.

Again, because of the rising volumetric efficiency of the fuel injection pump, more especially at the lower end of the speed range, the running of the engine, when idling, will be unstable, that is to say, at any given setting of the fuel injection pump, it will tend either to stop or to run away; to prevent this we must employ a second governor, or at least another set of weights in the same governor, if we are relying on a centrifugal governing, in order to control the idling speed. Alternatively, we may use an all-speed governor of the hydraulic or vacuum type, in which case the engine will be under governor control throughout the whole of its speed range.

Since, then, in the case of the engine we are considering, we are, in practice, limited to a mean gas velocity through the inlet valve of about 210 feet per second, and since the ratio of inlet air velocity to piston velocity cannot well be less than 6·25 : 1, we are therefore limited to a piston speed of 33·3 feet per second, or 2000 feet per minute.

All the above figures are based on the assumption that we are going to use cast cylinder heads and provide adequate cooling around and between the valves. They are based on the assumption also that we are going to use a combustion system which does not involve placing the injector between, or in very close proximity to, the valves. We might take a risk and gain a trifle more breathing capacity by closing a little the gap between the valves, or we could close it considerably if we were prepared to face the expense of a fabricated steel cylinder head, but neither of these expedients would normally be justified.

We arrive therefore at our first landmark, that the piston speed will be limited by breathing capacity to approximately 2000 feet per minute. At this piston speed and volumetric efficiency, and assuming an average mechanical efficiency at full speed and full load of, say, 74 per cent, we could rely on maintaining a brake mean pressure of at least 100 lb. per sq. in. at the clean exhaust limit with a comfortable margin to allow for slight deterioration.

With an engine of such breathing capacity and mechanical efficiency, we should expect to obtain a performance, on a basis of piston speed, as shown in fig. 12.7, at the point of just visible smoke in the exhaust, but in order to allow for slight deterioration, we should be wise to limit the maximum output to 100 lb. per sq. in. B.M.E.P. at a piston speed of 2000 feet per minute. Again, because of the difficulty of matching, throughout the speed range, the air and hydraulic characteristics, we shall probably be wise to limit the maximum B.M.E.P. at any point in the speed range to about 110 lb. per sq. in.

In order then to develop 130 B.H.P. at this piston speed, we shall need an aggregate piston area of 86·5 sq. in. or 14·4 sq. in. per piston of a six-cylinder engine and therefore a piston diameter of 4·3 in.

If we are prepared to go to the expense and complication of employing multiple valves, we could, of course, increase very substantially the breathing capacity and so raise the limit of piston speed to well over 2500 feet per minute, but other factors, which we will consider later, will render it inadvisable to employ, for this purpose, a piston speed much in excess of 2000 feet per minute, so that there is really no case for the employment of multiple valves.

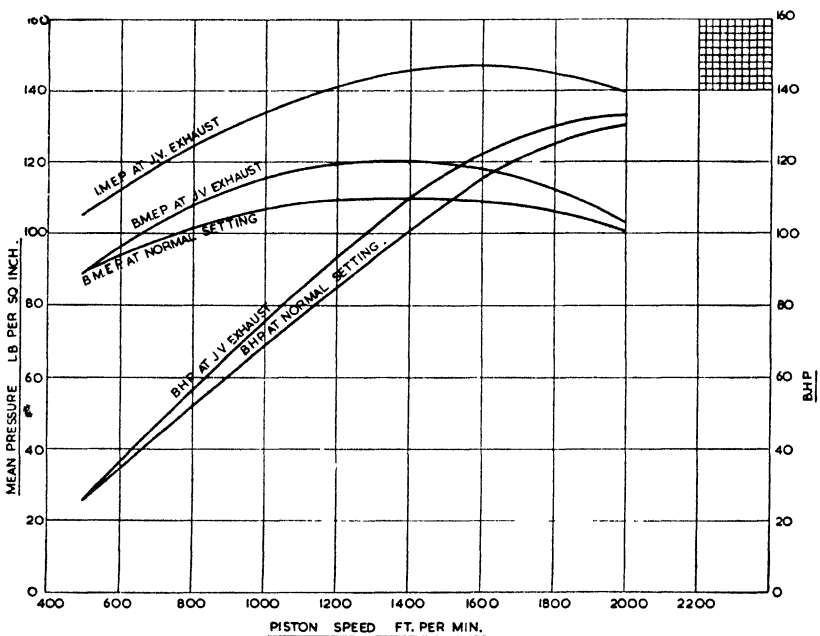

Fig. 12.7.—Typical performance curves plotted against piston speed

We have now established, as our starting point, that if we choose to utilize to the full the breathing capacity which two valves per cylinder can provide, we shall attain our target power with six cylinders each of 4·3 in. diameter quite regardless of the length of stroke.

Piston Stroke

Once we have decided on the cylinder diameter, or at least the minimum diameter, the next step is to decide upon the piston stroke. From the point of view of indicated thermal efficiency there is little or nothing to choose between a long or short stroke, but from that of mechanical efficiency there is much to be gained from the use of a long stroke, since, at the same limiting piston speed, the long-stroke engine will develop its power at a correspondingly lower r.p.m., and therefore with lower mechanical losses.

Since fuel economy is one of the first aims, it follows that we must give weight to this important consideration, all the more so in view of the fact that our mean working load is relatively very light, and therefore mechanical losses will bulk very large. On the other hand, a long-stroke engine is necessarily heavier, bulkier, and more costly than a short-stroke. Also the torque reaction of the slower running engine is correspondingly greater, and this may lead us into trouble with our engine mounting. Most cogent argument of all, perhaps, is that in a field where competition is intense, we simply cannot afford the luxury of a long-stroke engine.

In point of fact, geographical considerations will be found to set a limit to either extreme. In a six-cylinder engine the secondary disturbing forces and couples are balanced out within the structure of the engine. There is nothing to be gained therefore from the use of a long connecting-rod except a slight reduction in side-thrust. The use of an unnecessarily long connecting-rod means increasing the height, weight, and cost of the engine to no useful purpose, and, taking all things into consideration, there is no advantage in using, in a six-cylinder engine, a rod with a length of more than about 3·8 crankthrows. With a rod of this length and a long stroke, we shall be up against the limitation that the swing of the rod will foul the mouth of the cylinder. We could, of course, obviate this by cutting slots in the lower part of the cylinder liner but this will prevent the use of an oil control ring near the bottom of the piston, of which we may be sorely in need. With an I-section rod of the shank dimensions necessary for C.I. work and of 3·8 cranks long, and with a piston of normal proportions, we shall find that we cannot use a stroke of more than about 1·4 times the bore without fouling the cylinder mouth. By using a round rod, we could increase the stroke to perhaps 1·6 times the bore, but this is not a very desirable form. At the other end of the scale, if we make the stroke less than the bore, we shall run into the difficulty that the skirt of the piston will foul the balance-weights at the end of the stroke, and in any case we may find ourselves in difficulty with oil control, owing to the proximity of the open end of the cylinder to the crankshaft. In practice, therefore, and unless we use an unnecessarily long connecting-rod, we find ourselves limited to a stroke-bore ratio ranging from about 1·0 : 1 to about 1·4 : 1, and it is for the designer to choose the best compromise between these limits.

The above arguments all apply to a six-cylinder engine. If we were considering a four-cylinder, then because the secondary disturbing forces are both unbalanced and cumulative, it would be desirable to employ relatively longer connecting-rods and so render a wider stroke-bore ratio mechanically possible.

Considerations of weight, of torque reaction, and of first cost would all lead the designer to choose the shortest possible stroke; those of

mechanical efficiency, and therefore fuel economy, the longest. Let us assume that, in this case, we compromise and choose a stroke-bore ratio of 1·28 : 1. We shall find, however, when considering the design of the crankshaft that, from the point of view of local concentration of stress in the crankwebs, this is almost the worst possible ratio we could have chosen but, to relieve the crankshaft, we should have to depart very widely from these proportions. This ratio will give us a piston stroke of $4{\cdot}3 \times 1{\cdot}28 = 5{\cdot}5$ in. At a piston speed of 2000 feet per minute this corresponds to an r.p.m. at maximum power of approximately 2200.

We have now decided, after giving due weight to all the relevant factors, upon an engine with a cylinder bore of 4·3 in. and a piston stroke of 5·5 in. as being probably the best all-round compromise. If the price would have run to it, and if extra weight could have been tolerated, we would have preferred to increase the stroke to 6 in. or even 6¼ in., but we will assume that this is a luxury we cannot afford.

All the above arguments apply to a compression-ignition engine intended for heavy road vehicles. Before going any further it may be well to consider how far they would apply to other types of engine, say (1) a petrol engine for the same duty, (2) a marine engine.

In the case of the petrol engine we no longer have to match the volumetric efficiency of the cylinder as an air pump with that of the fuel injection as an hydraulic pump, hence we can run faster with the same valve area, for our peak will be reached only when the rising mechanical losses and the falling volumetric efficiency set a limit to any further gain. This usually occurs when the mean gas velocity through the inlet valves is in the region of 260 feet per second, provided that the carburettor or induction system do not impose an unduly early limit. In the case of the C.I. engine the ratio of areas, inlet to exhaust, may be as high as 1·5 : 1, but in that of the petrol engine, if we are going to work up to inlet gas velocities as high as 260 feet per second, we should reduce somewhat this ratio say to 1·3–1·4 : 1.

With the same inlet-valve area, and only a slightly larger exhaust-valve area therefore, we shall obtain our peak horse-power at a piston speed about 30 per cent higher than that of the C.I. engine.

Again, on account of the relatively large clearance volume we can, if we so desire, allow the valves to overlap the cylinder bore without having to gash out the liner, or we can place them at any angle to the cylinder axis that we may choose, and so increase greatly their size. In fact, with the overhead-valve petrol engine, we can generally get all the valve area we need without resorting to multiple valves, but we come up against the mechanical difficulty of operating large valves with a high lift at high speed, and it is, for this reason, rather than on account of breathing capacity, that we elect to use multiple valves in either large or very high-speed petrol engines.

There is also, of course, the consideration that at valve lifts below

the maximum the area of opening is controlled by the circumference, not the area, of the valve, and it is obvious that, say, two small valves will have a greater length of circumference than one large valve of the same total area. Since the valves are fully open only for a limited portion of their travel, this is a very important consideration, and one which is apt to be overlooked.

For the service we are considering there would be no argument for using more than two valves per cylinder for, even without overlapping the cylinder bore, we could obtain our peak power output at a piston speed of about 2600 feet per minute, with a stroke of 5·5 in.; this would correspond to about 2870 r.p.m. By using slightly larger valves, for which we could still find ample room, we could quite easily increase this to at least 3600 r.p.m. if we so desired. It would be only if we wished to obtain maximum power at speeds of, say, 4000 r.p.m. or over that we should be justified in employing multiple valves in a petrol engine of this size.

Again, as discussed in the chapter on "Mechanical Efficiency", the mechanical losses in a petrol engine are much lower than in a C.I. engine; we could afford, therefore, on this score to run at a higher speed, but not, in such a service, at a speed high enough to justify or necessitate the use of multiple valves.

In the case of a marine engine, and assuming that a suitable reduction gear is used so that both engine and propeller can be run at their most appropriate speeds, we shall never be called upon to run either at high speeds and low torque, or at very low speeds and high torque. For the former reason we need not lay quite so much stress on mechanical efficiency, and for the latter we need not worry about our volumetric efficiency at low speeds, and so can adjust our valve timing with an eye to the high-speed end of the range only; thus we can afford to prolong the period of opening of the inlet valve.

Cylinder Block and Crankcase

Once we have decided upon the cylinder dimensions, the next step is to choose the most appropriate structure for the carcase of the engine. From the point of view of girder stiffness and of rigidity generally, we would prefer to make the cylinders and the upper half of the crankcase in one single-piece cast-iron block, but if we do this we must, on the grounds of accessibility, limit the overall dimensions of the connecting-rod big-end bearing to such as will allow of the rod being withdrawn through the cylinder bore and this, in turn, will set a practical limit to the diameter of the crankpin.

Fig. 12.8 shows a typical four-bolt connecting-rod big-end bearing of proportions that will just pass through the bore of the cylinder.

Fig. 12.9 shows an alternative form in which the rod is split at

an angle, and which, of course, allows of a larger crankpin being used while still permitting the rod to pass through the cylinder bore.

The alternative of using a separate cylinder block frees us from this limitation and, of course, allows us to use aluminium for the top half of the crankcase and thus save some weight, though in a comparatively short-stroke engine the saving effected by the use of aluminium is relatively small. It is open to the objection that if the six cylinders are cast in one piece, the cylinder block becomes a very heavy and

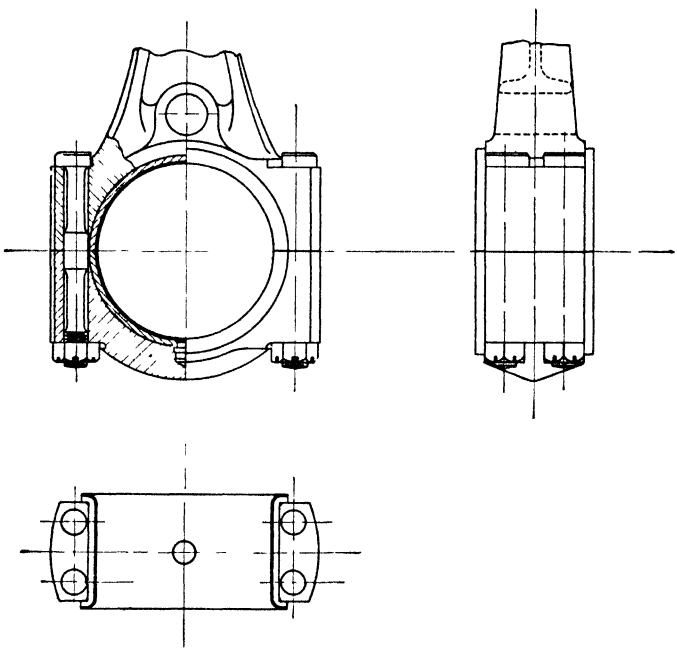

Fig. 12.8.—Typical four-bolt big-end bearing

cumbersome member, which is difficult to handle without risk of damaging the piston-rings, when all six pistons have to be entered—more especially does this apply when the pistons are armed with bottom scraper-rings. If, on the other hand, we divide the cylinders up into blocks of two or three each, then we lose much of the girder stiffness upon which we rely to resist the heavy bending moment due to the opposing couples set up by inertia of the pistons in a six-cylinder engine. We can, of course, restore the girder stiffness by bolting the several cylinder blocks together, but this involves extremely accurate machining if distortion of the crankcase is to be avoided, and introduces a number of other objections; it is probably justified only when the complete cylinder block is too large for handling on existing machine tools.

If we decide—and for such a size of engine and for such a purpose we shall probably be wise to decide—to make the upper half of the crankcase and cylinder block in one piece, then it remains to choose the form of cylinder construction. For such an arduous service, where a very long working life is called for, we shall have either to employ

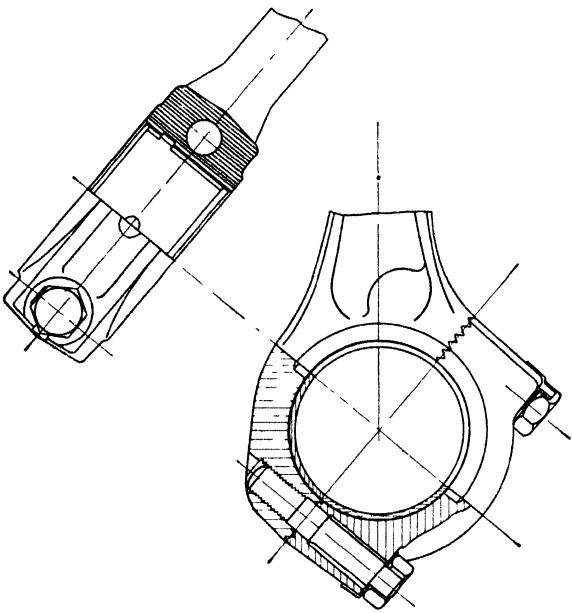

Fig. 12.9.—Big-end bearing split at an angle

renewable cylinder liners, or coat the bore of the cylinders with some material more resistant to wear or corrosion than cast iron. While the number of possible constructions is legion, the choice for such a purpose as that under discussion probably narrows down to three practical alternatives:

(1) The use of renewable " wet " liners—fig. 12.10.
(2) The use of renewable " dry " liners—fig. 12.11.
(3) An electro-deposited lining of porous chromium.

Each has its own advantages and disadvantages.

The advantages claimed for the " wet " liner are:

(*a*) It can be removed and replaced with great ease and without the need for any special tools or equipment. It is therefore especially applicable in the case of engines operating at a distance from a well-equipped depot.

(*b*) With a " wet " liner it is possible to provide for a high-velocity water circulation around the liner, and thereby to reduce

the piston temperature, a very important feature more especially in the case of relatively large engines operating, for the most part, at a high load factor, and a desirable one at all times.

(*c*) Since the liner is held only by a flange at the top end, it is free to expand without any restraint.

These apparent advantages, however, call for some qualification for, although the " wet " liner can be cooled uniformly by a high-

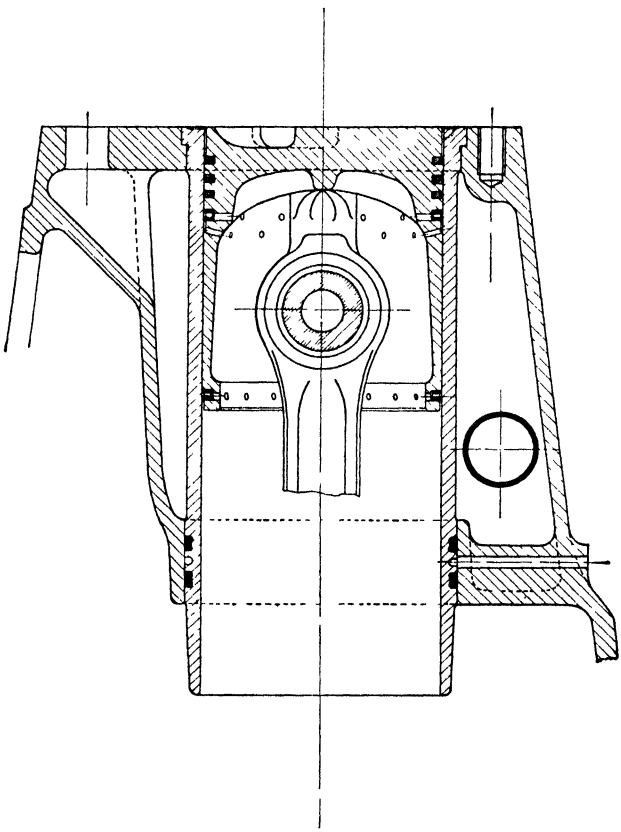

Fig. 12.10.—Typical wet liner construction

velocity water circulation over most of its length, yet the necessity for providing a fairly deep flange and a still deeper abutment to withstand the heavy pressure imposed by the cylinder-head bolts, interferes seriously with the cooling of the upper end of the liner. Again, although the whole skirt of the liner is free to expand at will, and is uninfluenced by any distortion of the cylinder block, this does not apply to the upper, and by far the most important, end which is clamped so securely to the upper deck of the cylinder block that it is subject to any distortion

of this deck which may be caused, for example, by the cylinder-head bolts and their bosses.

In the author's belief, the strongest argument in favour of the "wet" liner of the conventional form is that of ease of replacement.

Many designs have been evolved to overcome the objections mentioned above. One much in favour at one time on the Continent was that of providing a flange near the lower end of the liner which bears against a deck low down in the cylinder block. In this case, the water cooling can be carried right up to the head joint, for the upper deck is eliminated entirely (see fig. 12.12). The chief objection to this construction is that the whole water-cooled length of the liner is under compression by the cylinder-head bolts, and to ensure a sound gas-tight joint these must exert a pressure very considerably in excess of the maximum gas pressure. If this pressure is not uniform, or if the lower deck is not sufficiently rigid, there is a risk of the liner being distorted, not only out of round, but also into a banana shape. Since the success of this form of construction depends upon the rigidity both of the cylinder block and of the liner, it is clearly best adapted for quite small engines.

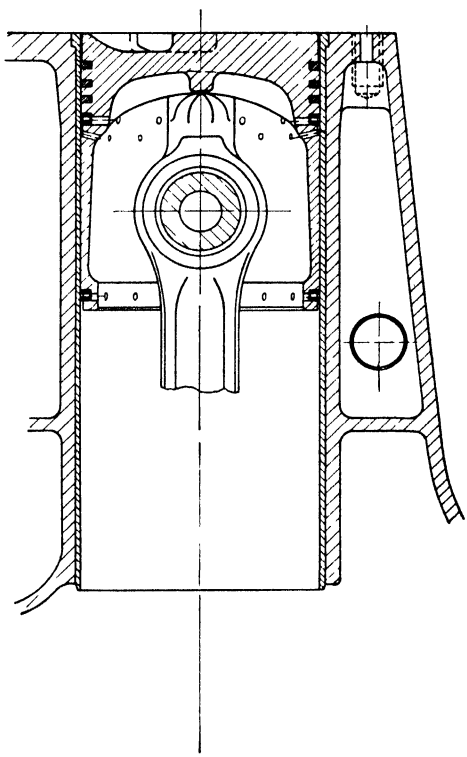

Fig. 12.11.—Typical dry liner construction

Fig. 12.13 shows a modification of this form in which the abutment flange is sufficiently far below the head joint to be clear of any distortion due to the cylinder-head bolts or their bosses; hence the length of liner in compression is much reduced and, therefore, the risk of distortion. This, in the author's view, has much to commend it, in that it provides excellent cooling to the top of the liner with the minimum risk of distortion.

When separate cylinder blocks are employed there is much to be said in favour of integral-headed cylinders, more particularly in the case of compression-ignition engines in which the valves must be mounted vertically in the head and must, or should, be contained within the

cylinder bore. Their use eliminates at once, both the thick double deck at the junction of the cylinder and head, and therefore in the zone of maximum intensity of heat flow, and also the risk of distortion of the cylinder bore due to the cylinder-head bolts. It has the further advantage of doing away with the necessity for a cylinder-head joint, always a potential source of trouble. It is open to the objection, of course, that the valves are less accessible, but in C.I. engines, with their low exhaust temperature, the valves are very seldom a source of trouble. When, however, integral heads are employed the designer must watch carefully his stress lines and make up his mind whether the load is to be carried by the cylinder barrel or by the water jacket of the cylinder; on no account must it be shared between the two. Fig. 12.14 shows another possible arrangement of "wet" cylinder liner applicable more particularly but not solely to an integral-headed cylinder. In this the liner is inserted from below and pressed up against an enclosed joint in the cylinder head. It is true that the liner is in compression, but only a light pressure need be exerted, and this can be limited by the use of quite small bolts while, to ensure against any local distortion of the lower end of the liner, the gland ring can be relieved locally or slotted to give it some elasticity. The advantages of this construction, so far tried only experimentally in a C.I. engine, are that it allows of a very high-velocity water circulation right up to the top of the liner and, at the same time, permits of very close cylinder centres, an important advantage, more especially when no intermediate bearing is used on the crankshaft.

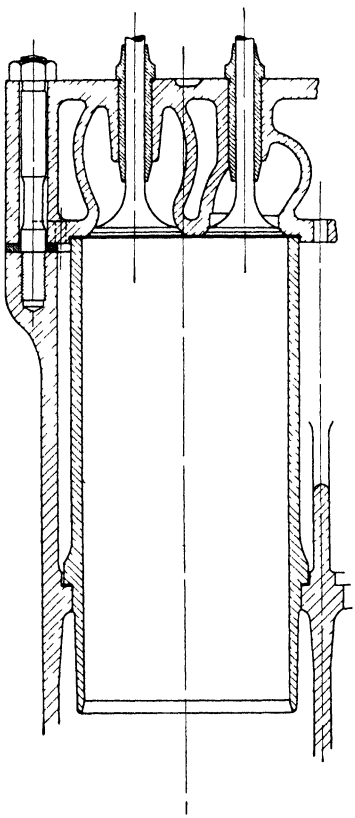

Fig. 12.12 —Wet liner with abutment near bottom end

When the cylinder block and crankcase are formed in one piece with detachable cylinder heads, there is much to be said in favour of the use of dry liners. Although the total thickness of metal between the water and the inner surface of the liner is greater, and although there is a break in the heat path between the two, yet the absence of a flange and abutment in the conventional form of wet liner construction

allows of the water being carried nearer to the top end of the liner, and this goes far to compensate for the poorer heat path over the remainder, but care must be taken to ensure that the circulation of the water at the upper end is not too much impeded by the cylinder-head stud bosses and, above all of course, that no steam trap can be formed between these bosses and the barrel. Another and quite important advantage is that with dry liners, no gas or water joints are required between the cylinder and its liner; yet another advantage is that of the increased stiffness of the block afforded by the cylinder barrels connecting the upper and lower decks, though this can, of course, be simulated in the case of the wet liner design by the provision of internal bulkheads. The main objection to the dry liner is that it must be pressed or shrunk into the cylinder barrel, and is therefore difficult to remove or replace without special equipment. More recently, the practice of fitting relatively loose dry liners has been adopted in the case of one well-known two-stroke and on a four-stroke engine. With these the heat barrier is increased considerably with consequent higher piston temperatures. In the case of the two-stroke engine, the pistons are oil-cooled in any case, so that they are much less dependent on the transfer of heat through the cylinder walls.

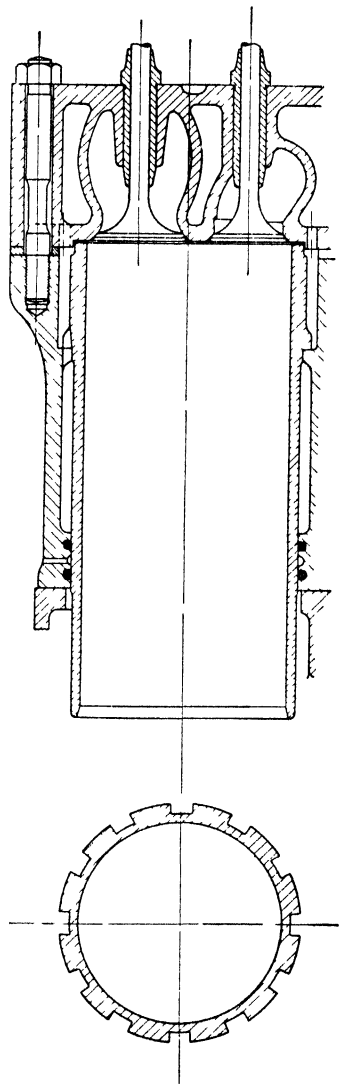

Fig. 12.13.—Wet liner with abutment just below cylinder-head bolt bosses

Again, there is the alternative of abandoning the use of renewable liners and relying instead upon the efficacy of a coating which is more resistant to both corrosion and abrasive wear. Of such coatings the only one which has, as yet, proved practicable is chromium. Unfortunately, oil will not readily wet or spread over a very smooth and highly polished chromium surface and, in the ordinary course of events, chromium will assume such a surface; when this happens, piston seizure is liable to occur. This objection can be overcome by either of two methods:

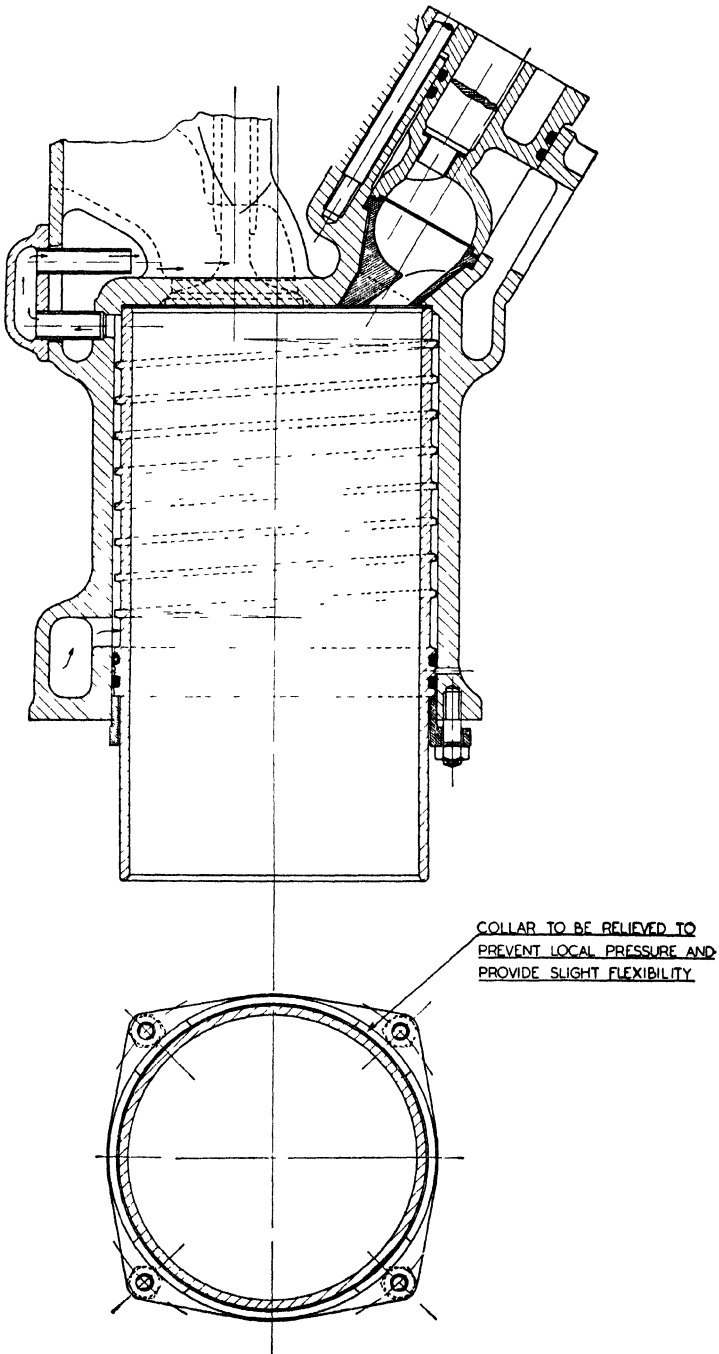

Fig. 12.14*a*, *b*.—Wet liner

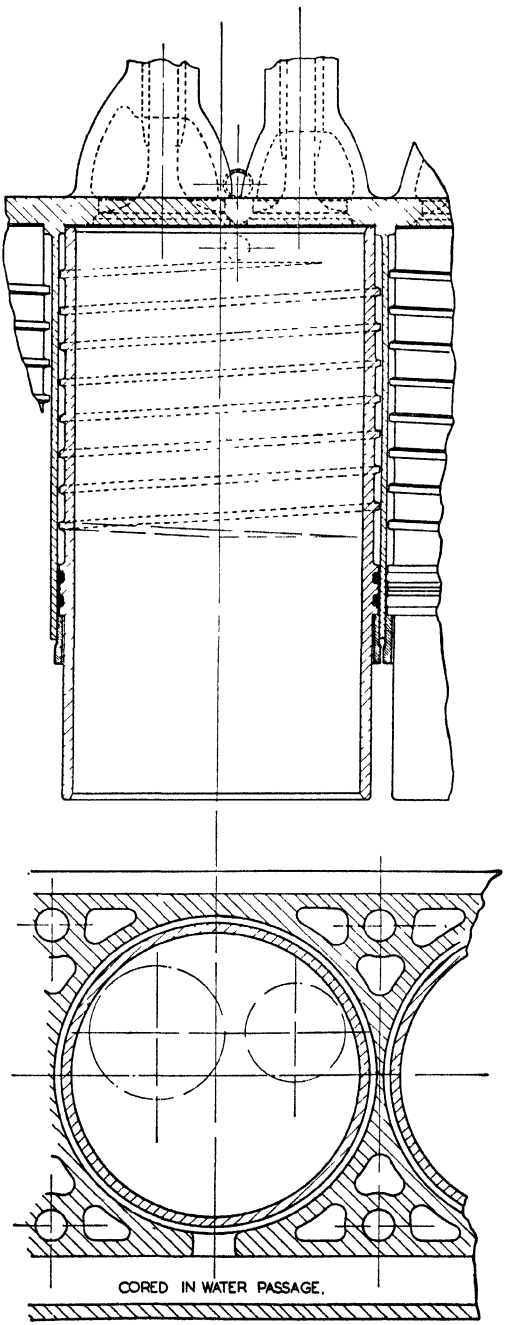

with high-velocity water circulation

(1) The use of a very porous chromium-plating which will give the oil ample foothold, or

(2) The use of a very short length only, of ordinary hard chromium-plating just in the local zone where wear normally takes place, leaving the remainder of the bore in cast iron.

Both methods appear to give excellent results provided that the technique of plating is carried out correctly, but success depends on the employment of the right technique. Either method, if carried out correctly, will give a life of something like three or four times that of any ferrous material, and therefore long enough for most practical purposes. Moreover, when excessive wear does occur, the lining can be stripped and redeposited though this, of course, is a major operation, entailing complete dismantling of the engine.

Let us consider now how these arguments apply to the particular case of the engine under discussion. We are in a highly competitive field, where first cost is a vital consideration, and one, too, in which weight, bulk, and smooth running are all important factors. We have decided already to eschew the luxury of a long stroke, and since our actual size is relatively small so that a monobloc casting can readily be handled, there would seem to be no good case for the use of separate cylinder blocks. Unless we are prepared to adopt some unconventional form such, for example, as those shown in figs. 12.13 and 12.14, we are left with the choice between wet and dry liners with, in the author's view, a slight bias in favour of the dry liner, bearing in mind that we can, without any change in design, always omit the liner and rely instead on chromium-plating of the cylinder bores.

CHAPTER XIII

Mechanical Design — Part II

The next and probably the most vital matter to decide upon is the design and material of the crankshaft and its supporting bearings. From every point of view we want to keep the length of the engine and its shaft as short as possible consistent with the provision of adequate bearing surfaces.

Let us consider first the choice of materials available, for on this more than anything else will our design depend.

The Crankshaft

For the crankshaft itself we may use:

(1) A nitralloy steel, surface-hardened by nitriding.

(2) A high-carbon or alloy steel, surface-hardened by flame or induction hardening.

(3) As (2), heat-treated but not surface-hardened.

(4) Cast iron.

Of these, without question, the nitrogen-hardened steel shaft is the best from every point of view, but it is unfortunately the most expensive for, since the nitriding process is a prolonged one, and the crankshaft a large unit, equipment of very large capacity is required.

Not only does nitriding provide an exceedingly hard surface which will run without appreciable wear or risk of scoring in almost any practicable bearing material, but it has the further great advantage that it increases the fatigue strength of the part by as much as 20 per cent.

The next alternative, the flame- or induction-hardened shaft, is, in the author's view, a very poor second best. The surface hardness attained is barely sufficient for satisfactory running in copper-lead bearings, while the localized nature of the treatment itself tends to lower considerably the fatigue strength, more especially at the fillets. To some extent this can be restored by applying surface compression at the more vulnerable points, for example by rolling the fillets, but, at best, it is inferior in fatigue strength to an unhardened shaft and very much inferior to a nitrided shaft; it has, however, the advantage that the hardening process is relatively rapid and inexpensive.

The plain heat-treated high-carbon or alloy-steel shaft, as opposed to the surface-hardened shaft, is suitable only for use in relatively soft bearing materials such as tin-base or lead-base anti-friction metals. If the unit loading can be kept low enough, and if an efficient oil cooler is provided, it will be found quite satisfactory, but these are two big "ifs".

The cast-iron shaft, fig. 13.1, at all events as applied to C.I. engines, is something of an innovation, but provided its limitations are realized and allowed for in the design, there is much to be said in its favour. In the first place it is relatively cheap as compared with a surface-hardened steel shaft. It has the advantage that the crankpins and journals can be cored out, thus saving the expense of boring, and, similarly, any form of balance-weight can be cast on; thus what would have been a complicated and costly stamping or forging in steel, becomes a simple casting in iron. Again, as a bearing surface, cast iron is almost ideal and very nearly, if not quite, equal to that of nitrided steel. Yet again its hysteresis, at least up to moderate stresses, is much higher than that of steel and, in consequence, its internal damping is such that its torsional oscillation is of smaller amplitude than that of a steel shaft, when subjected to the same exciting torque.

These are all weighty arguments in favour of cast iron; against them we have to reckon with the fact that its physical strength is inferior to that of crankshaft steels, and that it is particularly weak in bending. Also, great care must be taken in the technique of casting, lest the shaft be left with severe internal stresses due to unequal cooling and contraction. If, then, we elect to use a cast-iron shaft, we must be prepared to employ somewhat larger-diameter crankpins and journals, somwhat thicker crankwebs and greater radii of fillets, and ensure that the crank is well supported by adequate bearings between each crankthrow. On the face of it this would appear to mean that all dimensions in every direction must be increased, which would entail an increase both in the overall length of the engine and in the rubbing velocity, and therefore the frictional losses—a very heavy price to pay. Thanks, however, to the very excellent bearing and wearing properties of cast iron, we can safely use a fairly hard bearing material such as copper-lead or lead-bronze, which will stand a high unit loading, and so we can afford to use narrower bearings throughout, and thus keep down to about the same overall length as that of a steel crank. We must bear in mind, however, that high-duty cast irons, such as are used for crankshafts, have a modulus of rigidity of only about $8{\cdot}2 \times 10^6$ lb. per sq. in. as compared with $11{\cdot}7 \times 10^6$ for steel, hence the natural frequency of a cast-iron shaft will be only $\sqrt{8{\cdot}2/11{\cdot}7} = 0{\cdot}84$ that of a steel shaft of the same scantlings.

If we elect to use a cast-iron crankshaft, then we must, on account of its weakness in bending, provide a bearing between every crankthrow,

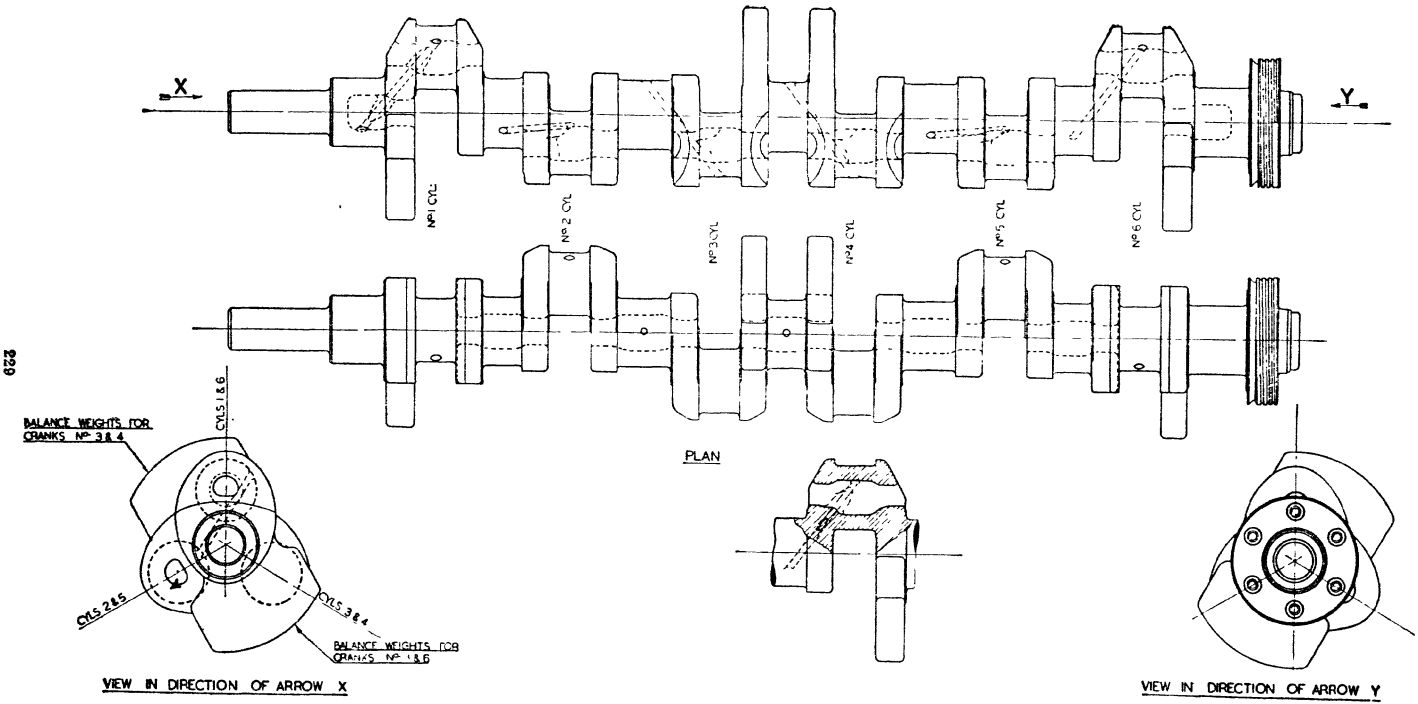

Fig. 13.1.—Cast-iron crankshaft with 7 main bearings

that is to say, at least seven bearings in all, but if we use a nitrided-steel shaft, there is much to be said in favour of a four-bearing crank (fig. 13.2), provided that our cylinder design is such that the space between adjacent cylinders can be reduced to the minimum.

The arguments in favour of a four-bearing shaft are:

(1) The large-diameter journal bearings, essential in a C.I. engine, cost a heavy price in viscous friction; the fewer we have of these the better.

(2) In any six-cylinder engine the centre crankshaft bearing is subjected to the heaviest centrifugal loading; this can be mitigated only by the use of heavy balance-weights which lower the torsional frequency of the shaft. It is therefore desirable to eliminate this bearing entirely.

(3) In a six-cylinder engine with close-pitched cylinders, it is preferable from the point of view of cylinder-head design to group the cylinders into three closely adjacent pairs leaving the widest gaps between cylinders 2 and 3, and 4 and 5, rather than between the two centre cylinders. Thus the four-bearing arrangement fits best with the geography of the cylinder head.

(4) The four-bearing crank is stiffer in torsion and therefore has a higher natural frequency than the seven; added to this less balance-weighting is required, which raises still further the natural frequency.

With the advent of the high-speed compression-ignition engine it became a convention to use only seven-bearing cranks in a six-cylinder engine, and few designers have dared to do otherwise, but those who have taken their courage in both hands and employed four-bearing cranks have, as yet, had no cause to regret their decision.

Thus far we have not considered the problem of crankshaft torsional vibration. This subject has been dealt with so fully in numerous books and other publications by those who have made a special study of the problem that the author does not propose to do more than touch upon it very briefly.

The crankshaft of any engine may be considered as a torsion bar, anchored at one end to a flywheel whose angular velocity is substantially constant and with the other end free to oscillate. Under these conditions it is subjected to a series of torsional impulses imposed by the pistons. At certain critical speeds the frequency of these impulses will coincide with some harmonic of the natural frequency of the shaft. When this occurs the normal angular deflection of the shaft will be increased many times and, if completely unchecked, would build up to such an amplitude as would result in fracture of the shaft. To some extent it is checked both by the hysteresis of the material itself and by viscous damping by the oil film in the bearings. This more

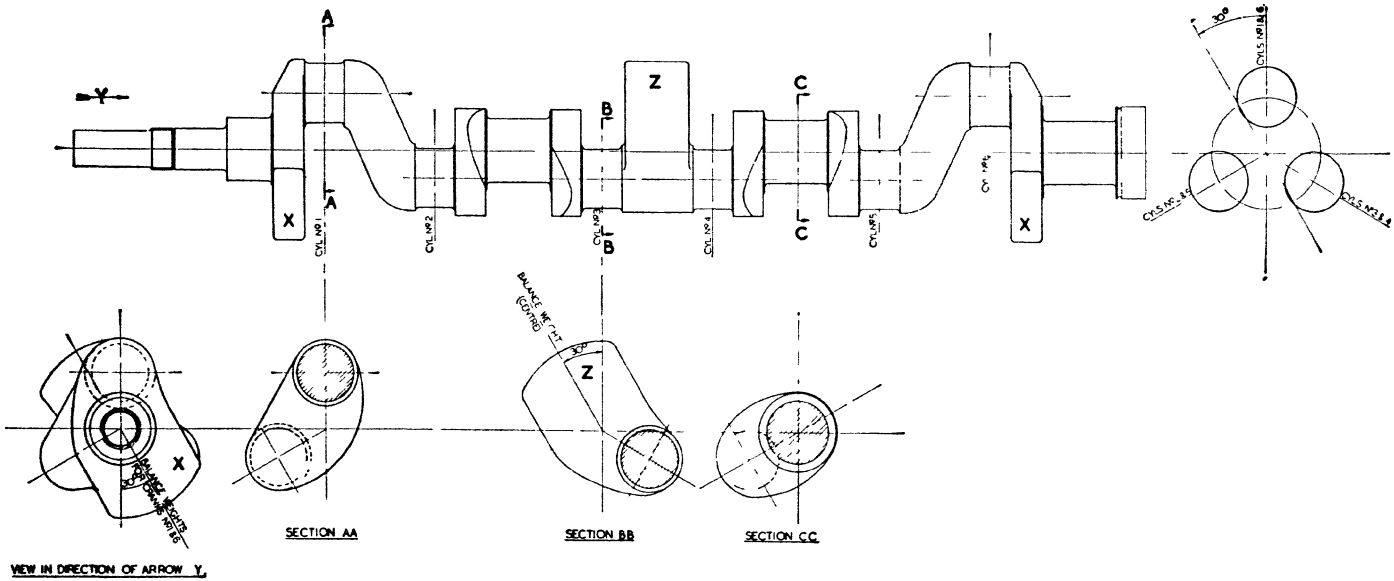

Fig. 13.2.—Steel crankshaft with 4 main bearings

or less inherent damping is sufficient to protect the shaft during the minor criticals, that is to say, when the torsional impulses coincide only very intermittently with the natural frequency, but it is not sufficient to deal with the major criticals when they coincide at much more frequent intervals. Consideration will show that in the case of a six-cylinder four-cycle engine with crankthrows of looking-glass symmetry, the main impulses due to gas pressure will occur three times per revolution. Some of these impulses will, of course, be applied near the flywheel with only a short length of shaft in torsion, and some near the free end, which somewhat complicates the issue. Again, the flywheel is not of infinite mass and its angular velocity is not constant, hence the node is at some appreciable distance from the wheel, all of which considerations still further complicate the issue.

The natural frequency of a partially balance-weighted seven-bearing crankshaft of the dimensions we have in mind will probably be somewhere in the neighbourhood of 12,000 r.p.m. The two main criticals will therefore be found at about 4000 and 2000 r.p.m., but in a six-cylinder engine with cranks at 120°, we shall have to beware also of a four-and-a-half, a seven-and-a-half, and a ninth order critical at about 2700, 1600, and 1350 r.p.m. respectively, as well as some minor harmonics. We can take care of these criticals by the provision of torsional dampers or de-tuners, of which there are many kinds, but which may be divided broadly into three classes, the Lanchester, fig. 13.3, the bonded-rubber, fig. 13.4, and the pendulum type, fig. 13.5. The former in its original form consisted of a small loose flywheel mounted on the free end of the shaft and driven from it through a multi-plate, oil-filled, viscous friction clutch. Later the reliance on viscous friction was abandoned on the score that the viscosity of hydrocarbon oils varied so widely with temperature, and also on account of the practical difficulty of retaining the oil against leakage. In its place a dry friction clutch was substituted, which proved more practical and reliable (fig. 13.6). Quite recently, however, the viscous friction damper has been revived, but using the new silicones whose viscosity varies but little with temperature (fig. 13.7).

The bonded-rubber damper, in which the small flywheel is attached to the shaft through the medium of a soft rubber bonding, functions in part as a de-tuner, for as soon as any torsional vibration occurs, the attached mass tends to move in anti-phase, so opposing the building-up of amplitude, while, at the same time, the spring rate of the attaching rubber increases with the amplitude of movement, thus altering the tuning of the system. Again, a good deal of the energy is absorbed by the high hysteresis of the rubber.

The third general type, namely the pendulum damper, consists of a small pendulum attached to the free end crank-webs or balance-weights and tuned to a particular periodicity to coincide with one order

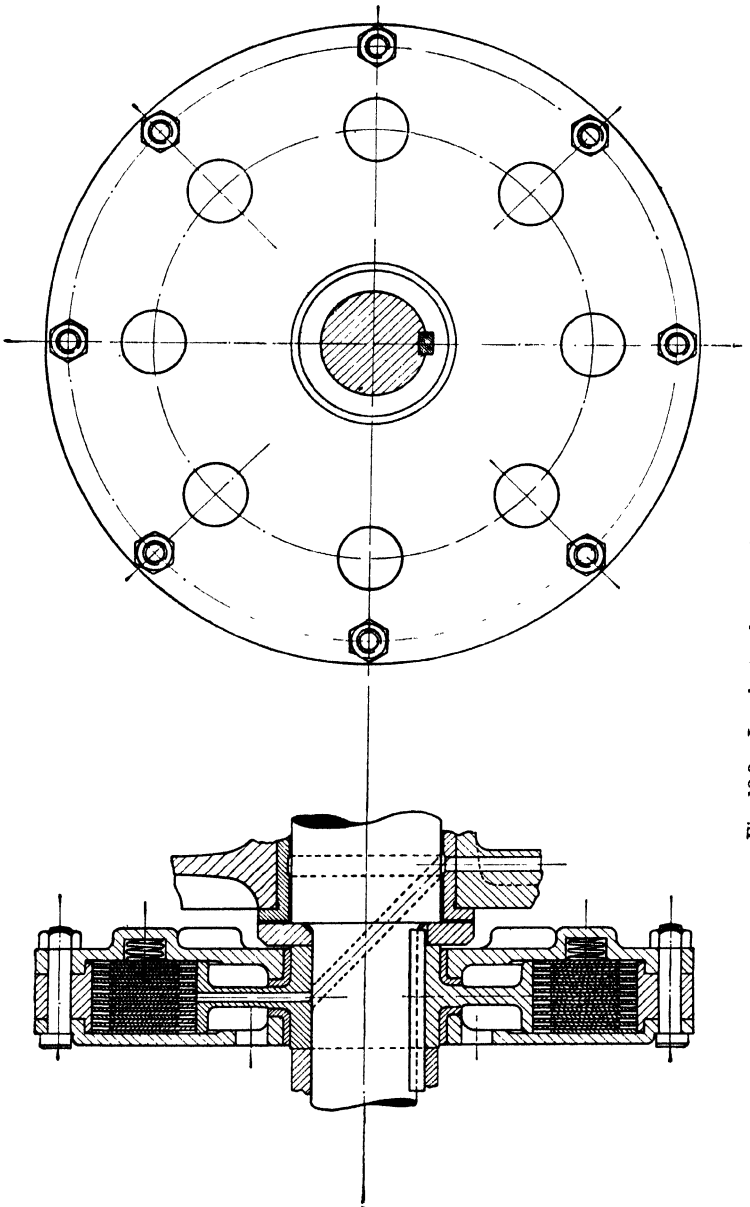

Fig. 13.3.—Lanchester damper, viscous friction type

only. When vibration of this order occurs the pendulum mass goes into opposite phase, thus counteracting the applied forcing torque.

Of these three general classes of damper, both the Lanchester and the bonded-rubber types will deal with any order of vibration, but since the energy they absorb is converted into heat, they will not for long endure the rigours of a major critical period. The pendulum damper, on the other hand, will suppress continuously any one order for which it has been tuned, but will not cope with any of the other orders. It is

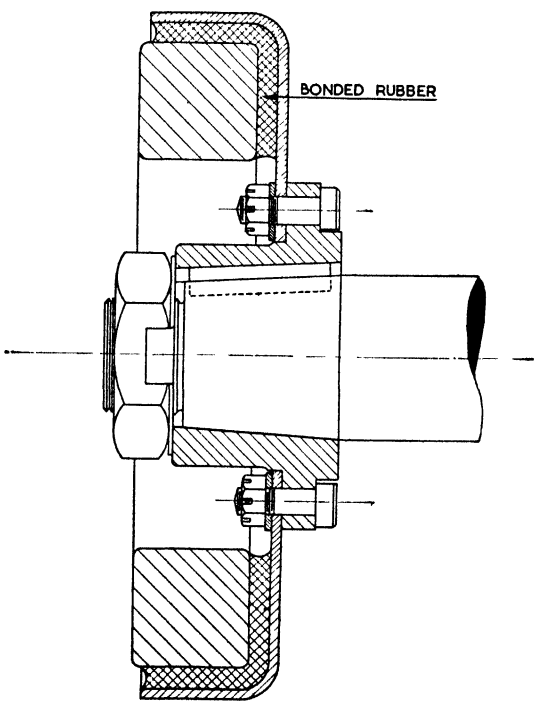

Fig. 13.4.—Bonded-rubber damper

effective therefore only when the range of engine speed is so limited that only one serious critical is included as, for example, in the case of certain aero-engines. To some extent the bonded-rubber damper may be regarded as a half-way house between the Lanchester and the pendulum in that it serves both as a damper and as a de-tuner.

In the case of a motor-vehicle engine such as that which we are considering, the speed will range from say 400 r.p.m. to say 2200 or over, and will certainly embrace the ninth, seventh-and-a-half and probably also the sixth order. It may even include at times, as when over-running the engine downhill, the fourth-and-a-half order, though not at maximum torque. On the other hand, from the very nature of its

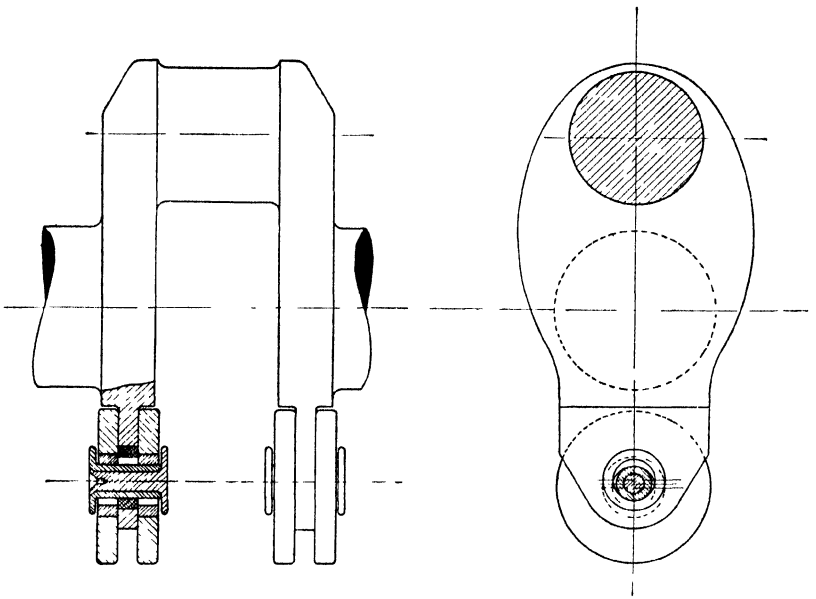

Fig. 13.5.—Pendulum de-tuner

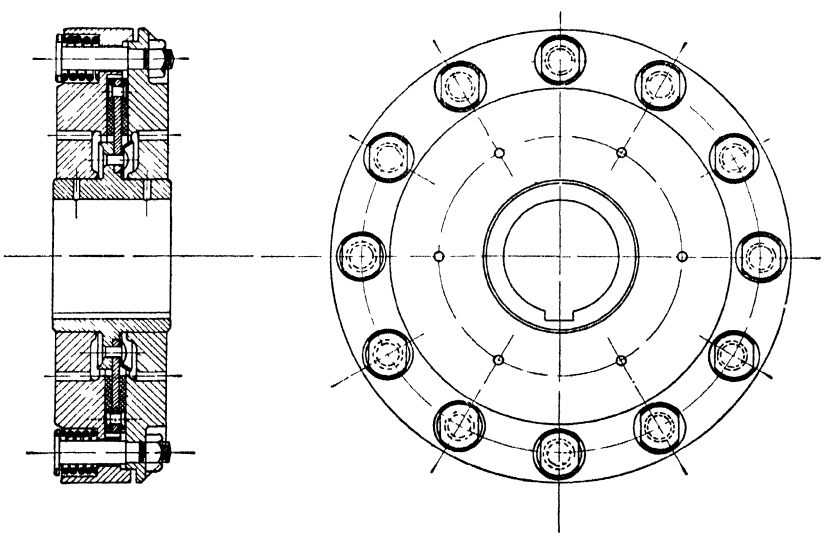

Fig. 13.6.—Modified Lanchester damper dry friction type

service, it will not be called upon to run for long periods at any one speed. For such a service either the Lanchester or the bonded-rubber type of damper is clearly the most appropriate, for it will cope quite easily with all the lower orders and for relatively short periods with the sixth and the fourth-and-a-half; the really dangerous third order we need not worry about, for it will be far outside the working speed range.

One of the most important decisions which the designer has to make in the case of an engine of this size and type is whether or not he is prepared to let his engine run through the sixth-order critical. If he

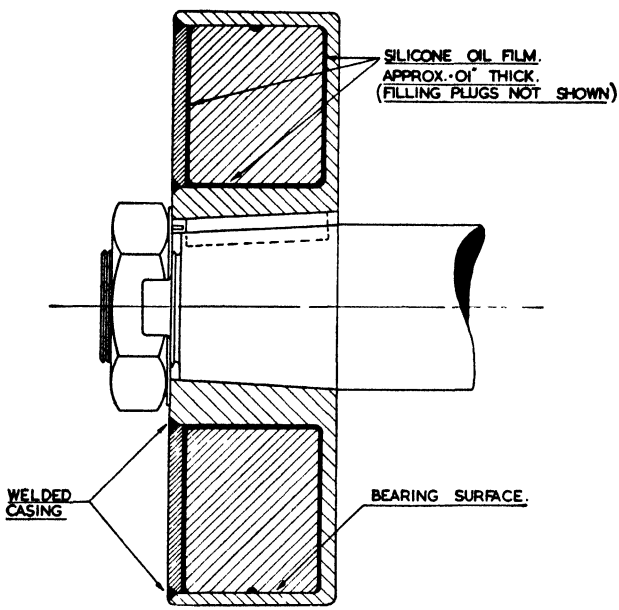

Fig. 13.7.—Modern viscous friction damper

is not prepared to do so, and if he elects to use a seven-bearing crank, then he will be forced to limit his engine speed to somewhere in the neighbourhood of 1800 r.p.m. for, to be safe, he must keep his full-power speed at least 10 per cent below the critical. If, on the other hand, he elects to run through the sixth order, then he will have so to design his damper, whether it be of the Lanchester or the bonded-rubber type, that it shall be capable, for reasonably long periods, of absorbing the energy put into it without attaining a dangerous temperature or suffering mechanical damage.

In one respect at least the road-transport engine is a simple issue; owing to the extreme resilience of the transmission, and more especially to the low stiffness of the propeller and rear-axle shafts, we need not,

from the point of view of crankshaft torsional oscillation, take into account what happens beyond the flywheel. Far otherwise is the case when the engine is direct-coupled to, for example, an electric generator or any piece of mechanism whose rotating member has a considerable moment of inertia. In such cases we must investigate the torsional system as a whole, and may well find that we shall have a two-node as well as a single-node vibration to cope with. All such cases, however, must be investigated on their own merits and no general rule can be laid down.

If, now, instead of a seven-bearing we employ a four-bearing crankshaft, our natural frequency will be higher for, other things being equal, the torsional rigidity of a crankshaft is dependent on the overall length of the shaft including the crankwebs. As a mental picture we can regard the crankshaft as a crinkled bar, and its torsional rigidity will clearly be a function of the length of that bar when uncrinkled and pulled out straight. Clearly the four-bearing shaft will be the shorter and therefore the stiffer of the two. Nor is this all for, owing to the absence of a centre bearing, we can afford to reduce the balance-weighting and thus further raise its natural frequency.

In the author's belief, designers have, in recent years, been inclined to let the bogy of torsional vibration overawe them to too great an extent and to show lack of confidence in the efficacy of torsional dampers, with the result that it has become the practice both to use excessively massive crankshafts with all that that implies in the way of large-diameter bearings and heavy friction losses and, at the same time, to limit the governed speed of the engine to about 10 per cent below the sixth-order critical. If more confidence were displayed, and more thought and development work put into the design of dampers, more especially from the point of view of heat dissipation, it would probably be found possible both to run safely at considerably higher speeds and, at the same time, to reduce the diameter of the crankshaft and therefore the viscous friction losses, which increase as the square of the bearing diameter, and thus improve substantially the mechanical efficiency.

While the proverbial form of crankshaft breakage is a fatigue failure in torsion, caused either by prolonged running at a critical speed with insufficient damping or by repeatedly passing through it, there is a tendency to ascribe every crankshaft failure to torsional vibration; failure in bending is, however, at least equally common and may be aggravated by axial vibration of the crankshaft, but is more generally due to breakdown or excessive wear of one of the supporting bearings, or to too thin crankwebs. This, of course, is an argument against the four-bearing crank in which the span between bearings is much longer, but this can be compensated for, to some extent, by the use of thicker crankwebs without increasing the overall length of the shaft. Its adoption rules out the use of cast iron, which is par-

ticularly weak in bending, and probably that of flame- or induction-hardened steel, whose fatigue strength is poor, leaving the choice between a nitrogen-hardened or an unhardened shaft. From the point of view of bearing wear in a C.I. engine, the latter will probably have to be ruled out also. It would seem, then, that if we elect to use a four-bearing crank, it should, and probably must, be of nitrided steel.

Yet again, we can reduce the bending stress in either the four- or seven-bearing crank by using narrower bearings which the new and harder bearing materials have rendered possible. This will allow us to increase both the thickness of the crankwebs and the radius of the fillets, without extending the cylinder centres.

While, in general, stiffness rather than strength is the keynote of high-speed engine design, it must be borne in mind that there are exceptions to this rule when stiffness involves local concentration of stress. The crankshaft is a case in point. With large-diameter crankpins and journals the stress in the crankweb between the two is highly concentrated, and this is the point from which fatigue failures generally start. In a very long-stroke crank there is usually a sufficient length of crankweb to give some flexibility and therefore prevent any local concentration of stress, but in the relatively large-diameter short-stroke cranks in use to-day, this does not apply, and the worst condition of all is reached when the rims of the crankpin and journal nearly coincide, and this unfortunately is a condition which is likely to obtain when the stroke-bore ratio is in the region of 1·3 : 1 which, from other points of view, appears to be the most favourable. With proportions such as these it is advisable to make the crankweb in the form of a very wide ellipse with its minor axis passing through the point of contact between the crankpin and journal. It is again perhaps an argument in favour of the four-bearing crank, for with only half the number of crankwebs subject to high local stress concentration, we could afford, within the same overall length, to make them very much thicker.

In the case of a C.I. engine with maximum pressures of the order of 800–900 lb. per sq. in., we shall find that for a steel crankshaft we need to make the diameter of the crankpin about 60 per cent that of the cylinder bore, and of the journal bearings about 66 per cent. Thus the rims will just coincide when the stroke-bore ratio is 1·26 : 1 or very nearly that which we have chosen. Actually the concentration of stress will be at its worst when the ratio is a little more than this, say about 1·35 : 1, but to relieve it appreciably we should have to go to extremes, viz. either less than 1·1 or more than 1·5 : 1, neither of which can we afford. If we decide on a stroke-bore ratio of about 1·3 : 1 then, more than ever, must we be careful to provide fillets of ample radius, viz. not less than 7 or 8 per cent of the shaft diameter and, at the same time, ensure that these fillets flow smoothly into both the bearing surfaces and the webs.

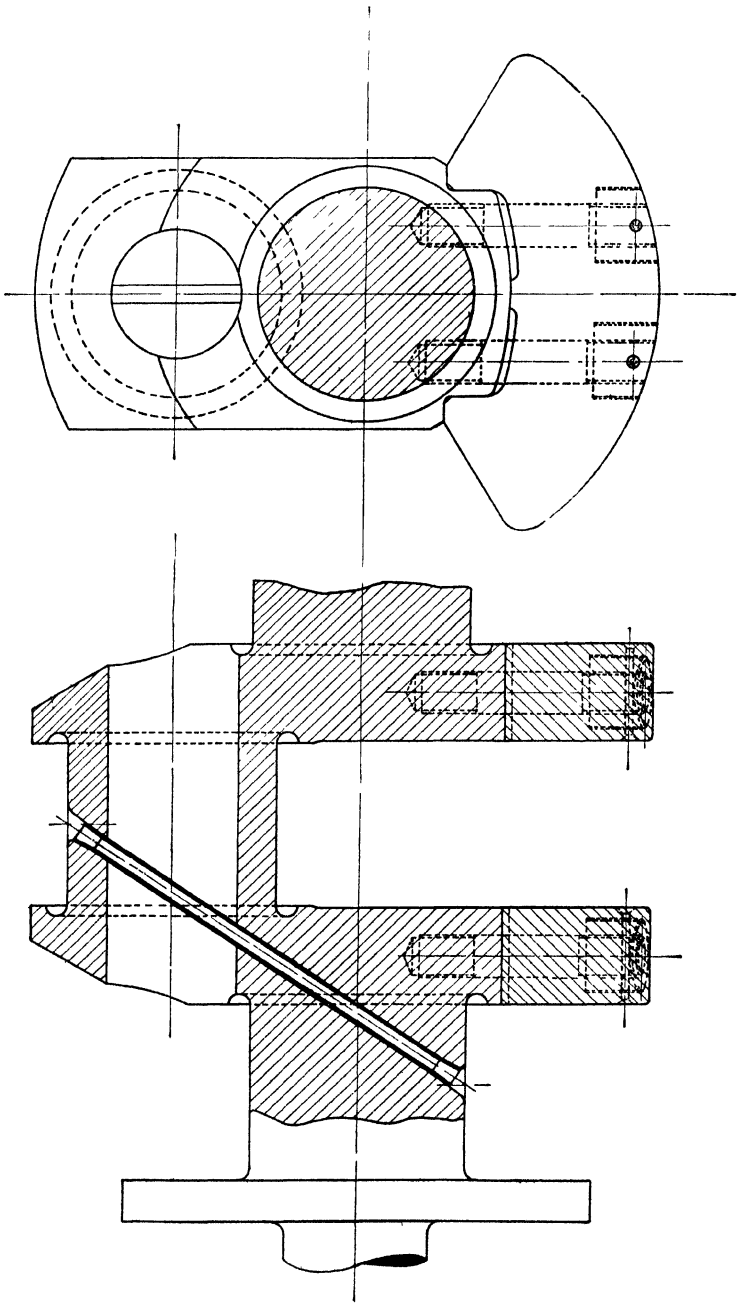

Fig. 13.8.—Crankshaft with undercut fillets

In the case of very large crankshafts, which are finished by turning, it is good practice to form the fillets by undercutting into the webs (see fig. 13.8), but in that of small shafts finished by grinding this practice is not to be recommended, since the fillet cannot be ground out at the same time as the journal and fatigue cracks are liable to start at the junction between the journal and the fillet if there is any hiatus at this point.

Bearings and Bearing Materials

Our choice as to the design and material of the crankshaft will be influenced also, of course, by that of the bearing material we elect to use, and this we must consider from two points of view:

(1) Life of the bearing lining under high-pressure shock loading.
(2) Wear of the crankshaft due to high mean loading.

If we decide to employ a nitrided-steel shaft in any case, then almost any reasonably hard bearing lining can be used, for the nitrided surface is so hard that we shall seldom be troubled with picking-up, ringing, or scoring, nor will the normal rate of wear be appreciable, and much the same applies also to the cast-iron shaft. From most points of view we would prefer, however, to line our bearings with either a tin-base or a lead-base white metal. The advantages of this are:

(1) We can use safely much closer clearances, for the relatively soft and plastic material is more accommodating, and, in the event of local metallic contact, it will fuse locally and re-form at a temperature below the boiling-point of the lubricant.

(2) It will serve as a sponge to absorb any grit, etc., carried into the bearing by the oil. Thus there is much less risk of scoring or ringing of the crankshaft by any relatively large particles which have eluded the filter, or of uniform wear due to the very minute particles of grit, etc., with which no filter can possibly cope.

The one serious objection to such white metals is their poor physical properties and low fatigue strength; moreover these deteriorate very rapidly with temperature. In a high-duty engine their successful use depends upon really efficient oil cooling. Under average conditions of lubrication and temperature the maximum peak load which a thin lining of tin-base white metal can safely endure is about one ton per square inch of projected area. If this peak load be exceeded, fatigue cracks will, in time, develop and gradually spread until pieces of lining become detached. With really efficient cooling, however, this loading can safely be increased to 3000 lb. per sq. in., provided of course that the load is well distributed over the length of the bearing.

In the case of compression-ignition engines the normal maximum cylinder pressure may be as high as 900 lb. per sq. in. If the peak load on the bearings be limited to one ton per sq. in. this means that the projected area, for example, of the crankpin bearing would have to be no less than 40 per cent of the piston area, and that of the journal bearings in like proportion, which will involve more length than we can afford. If we are prepared to take really adequate steps to cool either the oil or the bearings or both, we could reduce this to about 30 per cent, which would be just tolerable. If instead of a tin-base we employ one of the hardened lead bearing metals we could sustain a higher peak loading at the same temperature, but such bearing materials are very susceptible to corrosion in hot oil, and we shall still have to take the same care to keep the temperature down or we shall merely exchange failure by fatigue for failure by corrosion.

So far as friction is concerned, there is virtually nothing to choose between any of the materials, for, although their coefficients of dry friction, even under conditions of boundary lubrication, may differ widely, under those of full fluid lubrication, such as obtain in the case of the crankshaft bearings, friction is a function primarily of the viscosity of the oil, and to only a secondary degree of the pressure loading. It is virtually independent of the material of the bearing. Under these conditions the friction loss will be nearly proportional to the length of the bearing, but will increase nearly as the square of its diameter. From the point of view, therefore, of keeping the friction loss down to a minimum, we should prefer to employ long and small-diameter in preference to narrow and large-diameter bearings of the same total projected area, but considerations both of crankshaft stiffness and of overall length forbid this. Moreover, with long bearings it becomes virtually impossible to distribute the loading uniformly over their length.

On the other side of the picture very narrow bearings, more especially if they require large clearances, lead to practical difficulties with lubrication and oil control.

Taking all these factors into consideration it would seem that the optimum proportion for a highly loaded bearing is attained when the length is about two-thirds of the diameter.

If, now, instead of a relatively soft white metal we elect to use one of the harder bearing materials which have been developed during recent years, such as copper-lead, lead-bronze, cadmium-silver, etc., we can at once afford to double the maximum load and still keep within the limits set by fatigue failure; thus, if peak loading were the only factor, we could afford to reduce the projected area of all our bearings to little more than one-half, but we must remember that while the peak loading determines the life of the bearing material it is the mean average loading which determines the rate of wear.

For convenience it is usual to take as the peak loading the maximum gas pressure in the cylinder and to neglect the amelioration of that pressure by the inertia of the piston, and since a motor-vehicle engine is constantly called upon to operate at maximum torque and at quite low speed, this is a reasonable assumption, but in the case of marine, stationary, or aero-engines, which can exert full torque only at relatively high speed, the inertia of the pistons and connecting-rods reduces substantially the peak loading, and this consideration should be taken into account.

By far the bulk of the mean loading throughout the cycle is that due to the inertia of the reciprocating parts and to centrifugal forces. To keep this down to a minimum, we must do all we can to reduce the weight of both the reciprocating and rotating parts. In so far as the crankshaft journal bearings are concerned, we can, of course, neutralize a large part at least of the centrifugal loading by the provision of adequate balance-weights, but only at the cost of lowering the natural frequency of the shaft.

Wear. It appears that under normal running conditions of full fluid lubrication, wear of a shaft in its bearings is due primarily to the presence of grit, etc., which is imported into the bearing by the lubricating oil. These minute particles of grit, too small to be caught by any filter, then become embedded in the surface of the bearing material but may still project sufficiently to span across the oil film when it is at its thinnest and so to lap the shaft. To a secondary degree it is due to attrition, when, owing to the thinness of the oil film, the high spots on both members of the bearing come into metallic contact, but with highly finished surfaces, and an ample supply of lubricant, it is doubtful whether wear by attrition is an important factor provided that the materials are compatible and are not such as will readily weld together. Clearly the higher the mean loading, the thinner will be the oil film on the loaded side of the bearing, and therefore the greater the intensity of the lapping process. Again, the harder the surface of the shaft, or the softer that of the bearing material, the more readily will the particles be driven home into the latter, and so out of harm's way. Other things being equal, the rate of wear of the shaft will depend upon the difference in surface hardness between itself and the bearing material; the ideal is clearly the hardest possible shaft in the softest possible bearing.

If a soft, as opposed to a surface-hardened, steel shaft is used, then we are almost bound to employ white metal, at all events for parts of the bearing, for any other material is too hard and will lead not only to undue wear, but also to ringing and scoring of the shaft. If a flame- or induction-hardened shaft is used, then we can employ a copper-lead bearing material, provided that the loading is not too high, but we shall be on the border-line of scoring. Copper-lead, as opposed to lead-

bronze, consists, in effect, of a fine copper sponge saturated with lead. In principle the copper provides the necessary physical strength, while the lead serves as the bearing material, but, of course, it is not possible in practice to separate the two functions so completely, and a considerable area of the bearing surface is represented by copper which is really too hard for anything but a very hard steel shaft. A useful compromise can be achieved by coating a copper-lead bearing with a thin deposit of pure lead and this in turn can be protected from corrosion by a still thinner deposit of indium, which appears to soak well into the lead. Also the low melting-point of indium allows of local fusion without destroying the general oil film and so, as in the case of white metal, allows of closer clearances being employed. Thus treated, a copper-lead bearing gives satisfactory results against a flame-hardened shaft and can even be used against an unhardened shaft provided the peak loading is not too high.

Another useful compromise when using an unhardened or insufficiently hardened shaft, is to employ a composite bearing, one half—that subject to shock loading—in copper-lead, and the other in white metal. The latter will then serve as a soft sponge to collect and absorb the grit. However hard the shaft, there remains a good case for the deposits of lead and indium, for their presence allows of closer clearances being used, while the protection that indium gives against corrosion by hot oil is always a useful feature.

Let us next see how all these considerations apply to the engine we have in view. If we are prepared to face the cost of a nitrogen-hardened shaft, then we can use relatively hard bearings such as copper-lead and, in the case of a seven-bearing crank, can afford to reduce the projected area of the crankpins and the intermediate journal bearings. If the crank is completely balance-weighted then, theoretically at all events, we need provide no increase in width to these bearings over that of the intermediate bearings, but it is usually impracticable to accommodate enough balance-weight completely to balance, in each line, all the rotating weight, nor is it even desirable to do so on the grounds of torsional oscillation. Yet again, if we use a seven-bearing crankshaft, we shall probably elect to make the cylinder heads in two blocks of three each, and this will mean that we shall have to increase the space between the two centre cylinders, in any case, so that a wider centre bearing can easily be accommodated. As to the two end bearings, the general geography of the engine will usually allow of these being made somewhat longer without affecting appreciably the overall length of the engine. We shall now probably find that the centre-to-centre length of the crankshaft is actually less than the minimum cylinder centres, in which case we can allow ourselves a little more elbow-room in the direction of thicker crankwebs and more generous fillets.

If, now, instead of a nitrogen-hardened steel we elect to use a cast-iron crankshaft, we can still quite safely use "hard" bearings and cut down the bearing length to the same minimum, but, on account of its lower physical strength, we shall have to use somewhat larger diameter bearings and thicker crankwebs; these we can probably accommodate without increasing, beyond the minimum, the cylinder centres, but we shall have to pay the price in higher friction losses due to the larger diameter journals.

If we use an induction- or flame-hardened shaft we shall have, on the score of shaft wear, to employ wider bearings in order to reduce the mean loading and, in this case, probably the best compromise will be to use copper-lead, with or without a thin flashing of lead and indium, for that half of the bearing which takes the shock loading, and white metal for the other half.

We must bear in mind that the fatigue strength of such a shaft is less than that of an unhardened, and very much less than that of a nitrided, shaft; to compensate for this we shall need somewhat thicker webs and more liberal fillets and, in fact, somewhat the same proportions as for a cast-iron shaft.

If we use a heat-treated but not a surface-hardened steel shaft we shall, on the grounds of wear, have to use still wider bearings, preferably of white metal throughout, and we shall have to be very careful about our oil cooling. It is true, of course, that many engines to-day use copper-lead bearings with unhardened shafts, but, in such cases, and in order to avoid excessive wear of the shaft, the width of the bearing is such that the maximum shock loading is only about 3000 lb. per sq. in., and a very little increase in width or very thorough oil cooling would probably bring them within the scope of the more kindly white metal.

Lastly, let us consider the case of the four-bearing crank from the bearing point of view. Here we have eliminated the centre bearing with its high dynamic loading and, by so doing, we have eliminated also the main argument for balance-weighting the crank, beyond, of course, such weighting as is necessary to put the crankshaft itself in running balance.

If we adventure on the use of a four-bearing crank, we shall no doubt elect to group our cylinder heads and valve ports in pairs, and this will mean that there will be ample width available in any case for the intermediate bearings, while the mean dynamic loading upon them will be relatively light. Since we shall now have room for fairly ample bearing surfaces, we may even be able to return to the use of white metal for the crankshaft journal bearings.

Again, by eliminating three large-diameter bearings we shall have reduced the total friction loss in the engine by a substantial amount.

It would seem, then, that the balance of argument is in favour of

the use of a four-bearing crank for a six-cylinder engine. In the case of petrol engines this has, for long, been common practice, but designers have been afraid of applying it to C.I. engines on account of the high bending moments due to the long span between bearings, combined with the use of much higher gas pressures, not only on full but at all loads, a fear that is perhaps more imaginary than real, but a very understandable one for, should the shaft fail, to revert to a seven-bearing crank would involve a complete re-design of the engine from " A " to " Z ".

Let us suppose that, in this case, we take our courage in both hands and decide, as our first choice, upon a four-bearing nitrided-steel crankshaft. Then we can, if we like, make use of ordinary white-metal linings, at least for the journal bearings, for neither the peak nor the mean loading is likely to be too high for this material.

Thus far we have considered only the journal bearings, for upon the number and dimensions of these must the design of the engine depend. We have next to consider the connecting-rod or crankpin bearing. Here we have the full shock load applied to the top half of the bearing and most of the dynamic loading to the lower half. We are faced with the difficulty also of spreading the load uniformly over the bearing area for, on account of rotating weight, we must keep the connecting-rod as light as possible, and cannot possibly afford as rigid a mounting as in the case of the journal bearings. We must, therefore, do all we can both to distribute the load sideways and to avoid too great a concentration immediately under the shank of the rod. Also, we must bear in mind that since the top half of the crankcase and the cylinder block are in a single piece, the overall dimensions of the big-end of the connecting-rod must be limited to that which will pass through the cylinder bore.

In a compression-ignition engine of the size and proportions we are considering, and with either a cast-iron or flame-hardened steel shaft, we cannot afford to make the crankpin less than about 60 per cent of the cylinder diameter, nor can we afford to make it much more and still be able to pass the connecting-rod through the cylinder bore. With a nitrided-steel shaft, we could afford to make it a little less, more especially if we keep it narrow. If, now, we are prepared to reckon on a peak loading of, say, 5000 lb. per sq. in. at a maximum gas pressure of 900 lb. per sq. in., which should be quite safe for any of the " hard " bearing materials, our length becomes 30 per cent of the piston diameter, or 1·30 in. in the case of the engine we are considering. This length is of course reckoned on the parallel portion of the crankpin and takes no account of the fillets, etc., which together will occupy another, say, 0·45 in., bringing the distance between the crankwebs to 1·75 in.

With careful design of the connecting-rod it should be possible to spread the load fairly uniformly over a bearing of this width provided

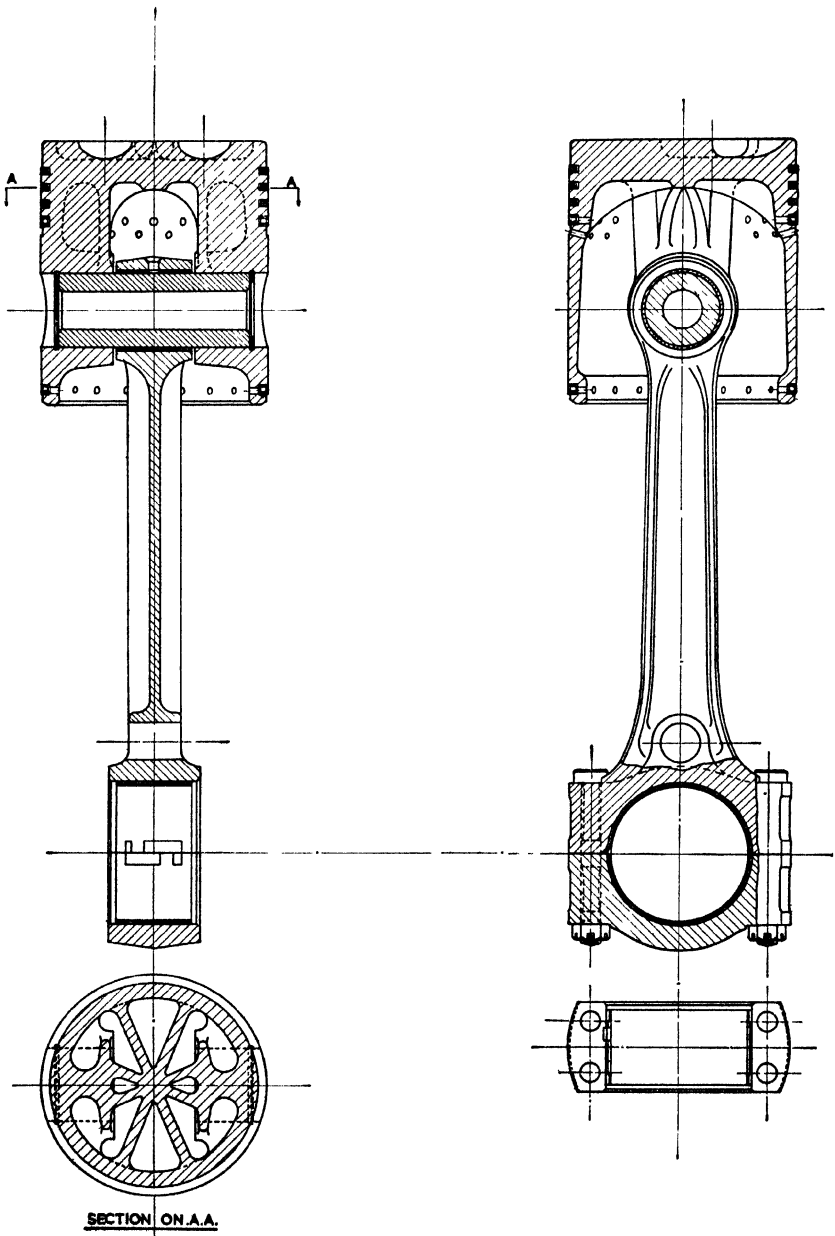

Fig. 13.9.—Piston and connecting-rod assembly

both that the cap of the rod is sufficiently rigid, and the bolts a sufficiently close fit, to prevent any spreading of the arch under the peak loading.

In order to avoid concentration of load immediately under the centre web of the shank of the rod, it is in the author's experience well worth while to provide a little resilience by piercing the centre web just above the big-end (see fig. 13.9).

In cases where the connecting-rod must pass through the cylinder bore, it is always difficult to provide a sufficiently stiff big-end with adequate width of abutment between the rod and the cap. In such cases the comparatively recent development of strip bearings has helped the designer greatly. These consist of a thin steel ribbon, lined on one side with the appropriate bearing material, and then cut off to length and rolled up to form a bearing shell. By this technique it is possible to reduce greatly the thickness of the steel backing, and it has the further advantage that since the lining is applied as a continuous process to an endless ribbon of steel, it is possible to maintain far better control over the heat treatment and uniformly of the bearing material, and also, at only slight extra cost, to add such refinements as flashing the surface with lead or indium, or both. In such bearings, however, the stiffness of the very thin steel backing is negligible, and the bearing will take its form therefore from the housing in which it is supported, hence it is vitally important to ensure that this is accurately machined.

As regards the small-end of the connecting-rod, it is very unusual for this bearing to give any trouble at all in a four-cycle engine, provided that the gudgeon-pin itself, and its supports in the piston, are stiff enough. Experience indicates that, for a compression-ignition engine, the gudgeon-pin diameter should be approximately 33 per cent of the piston diameter and the width of the connecting-rod bearing about the same. This will give a peak loading of about 8000 lb. per sq. in. which, in practice, appears to be quite satisfactory, provided, of course, that the gudgeon-pin is really hard. The much higher loading at the gudgeon-pin than at the big-end bearing is permissible because of the low rubbing velocity, and this, in turn, allows of a much harder bearing material such as phosphor-bronze being used with safety. In the case of two-cycle engines, however, where there is no reversal of load to restore and re-form the oil film, this bearing is liable to be very troublesome; so much so in fact that most makers of small high-speed two-cycle compression-ignition engines have found it necessary to resort to needle roller bearings (fig. 13.10). It would seem, however, that a plain phosphor-bronze bearing can be made to behave in a moderately high-pressure two-cycle engine, provided that the surface is broken up by a large number of axial oil grooves whose pitch is substantially less than the angular movement of the rod (fig. 13.11).

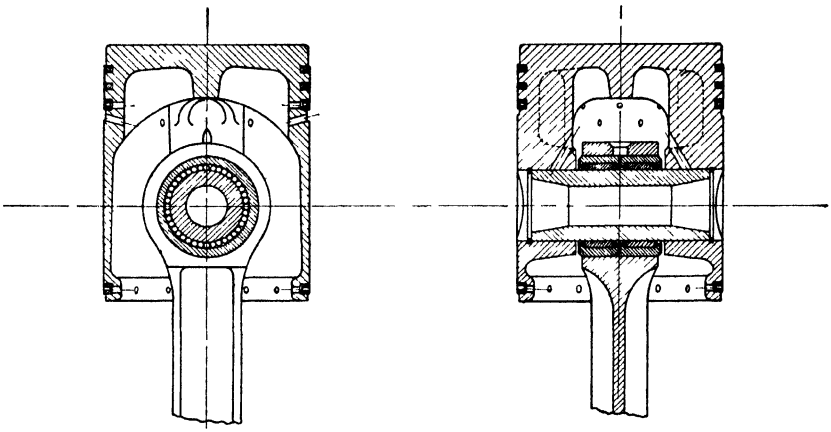

Fig. 13.10.—Gudgeon-pin with needle roller bearings for 2-cycle engine

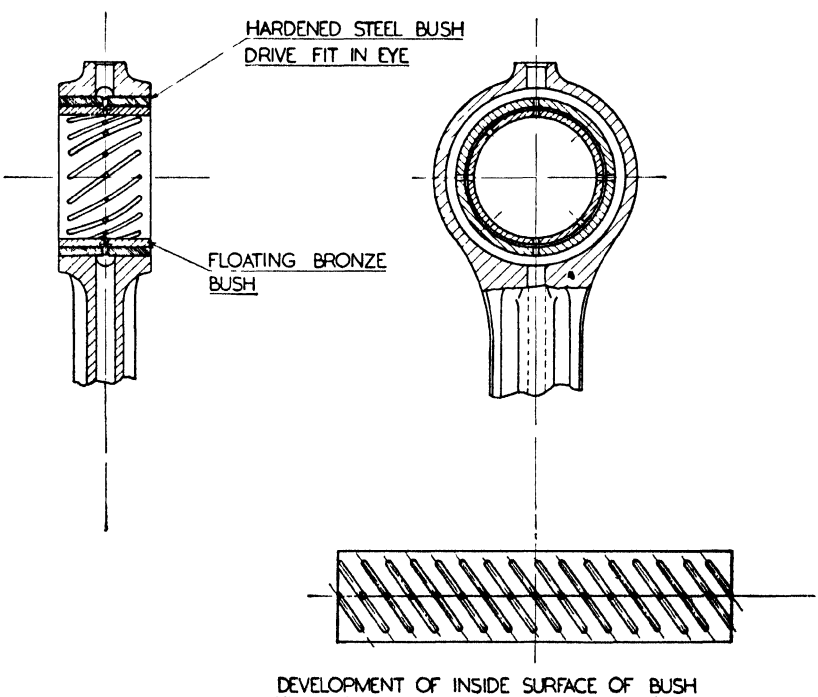

Fig. 13.11.—Gudgeon-pin bearing with floating bush for 2-cycle engine

Gudgeon-pin failures are generally due to:

(1) Failure in bending in which the pin usually fractures like a carrot.

(2) Failure by longitudinal splitting in which case it will break up into staves like a bamboo.

As to (1) both the cause and the remedy are obvious, but as to (2) the tendency to split longitudinally is due to the walls of the hollow pin being too thin, so that it is distorted out of round, and investigations of such failures will usually reveal the presence of an incipient fatigue crack starting from the inside of the hollow pin and spreading longitudinally. Such a fatigue crack will develop from some initial roughness or scratch in the bore of the pin, and the remedy is clearly to ensure that the bore is smooth and polished or, better still, work-hardened by button broaching.

Since the gudgeon-pin forms a substantial part of the total reciprocating weight, we want naturally to keep it as light as possible and are apt, in this endeavour, to go too far in hollowing it out. We can go much further in the direction of weight saving if we are prepared to hollow it out from both ends leaving a complete bulkhead in the centre, but this, of course, is a much more costly operation, makes polishing difficult, and button broaching impossible.

The Cylinder Head

The overall length of our engine will be governed either by the length of bearing area we must provide for the crankshaft, or by the geography of the cylinder heads and cylinder block. If we take full advantage of the harder bearing materials available to-day, the crankshaft need no longer be the controlling factor and the length will then be determined by the needs of the cylinder heads which we must consider next.

We have already decided to employ detachable cylinder heads, and the choice before us is as to how these are to be sub-divided. We can use either a single-piece casting comprising all six heads, or we can sub-divide this into either two blocks of three or three blocks of two. The other alternative of using separate heads for each individual cylinder, though preferable in the case of larger engines, must, in this case, be ruled out because of the increased length of engine which it involves.

In the case of petrol engines it is customary to make all six cylinder heads in one single casting but such engines are usually smaller, operate at lower pressures and have a more uniform distribution of heat. In a C.I. engine of the size we are now considering, not only does a single-piece casting become rather a complex member from a foundry point

of view, but the uneven temperature gradients along its length give rise to very severe thermal stresses. Thermocouple readings taken in parallel rows along the lower deck of the cylinder head reveal that the mean temperature of the metal in the line of the valves is very much higher than at either side of this line; thus under working conditions the centre line of the head comprising the valve seats is under severe compression due to thermal expansion and this may lead to distortion of the valve seats or to cracking of the relatively narrow bar of metal between the seatings.

Clearly the more heads that are incorporated in a single casting, the greater will be the cumulative thermal stresses and therefore the greater the liability to valve-seat distortion or cracking. To a large extent, such thermal stresses can be alleviated by cutting slots in the lower deck of the head between each cylinder and thus allowing some measure of flexibility (see fig. 13.12). In the author's experience this proved quite successful in overcoming valve-seat distortion and cracking in a number of cases where single-piece six-cylinder heads were insisted upon, and is sound practice wherever multiple heads are used. Although by such means the single-piece six-cylinder head can be made to behave satisfactorily, it is hardly to be recommended on account both of the high percentage of foundry failures and of its high cost of replacement in the event of failure. If we discard the single-piece head for all six cylinders, then the choice lies between the two- and three-piece and this in turn depends upon whether we elect to use a four- or a seven-bearing crankshaft, for the division of the heads must, of course, coincide with the crankshaft journal bearings.

From a purely mechanical point of view the detail design of a detachable cylinder head is probably the most difficult problem of all.

In the first place, in order to ensure a sound gas joint, the holding-down studs must be distributed as uniformly as possible around the circumference of each cylinder, and the depth of the head must be sufficient to ensure ample stiffness, otherwise it will tend to arch between the bolts. Again we have to ensure as far as possible that the stressing of the holding-down studs shall not cause distortion of the cylinder bore or liner. Clearly the aim should be to provide the maximum possible number of the smallest studs or set screws which are adequate for the purpose, bearing in mind that the cumulative pressure exerted by the head studs must be considerably in excess of the highest gas pressure to which they will ever be subjected. In practice we are faced always with the problem that we have to provide ample passageways for the inlet and exhaust ports, and ample cooling for the injector, and therefore simply cannot afford to obstruct the free flow of the coolant by too many bolt bosses. In an engine of the size we are considering it will generally be found possible to provide six bolts per cylinder, though, from the point of view of maintaining a reliable gas

joint, without distorting the cylinder bore by too localized and concentrated a loading, it would, of course, be preferable to provide more.

In the early days of the internal-combustion engine it was believed that adequate cooling of the cylinder and cylinder head could be achieved merely by immersing them in a tank of more or less stagnant

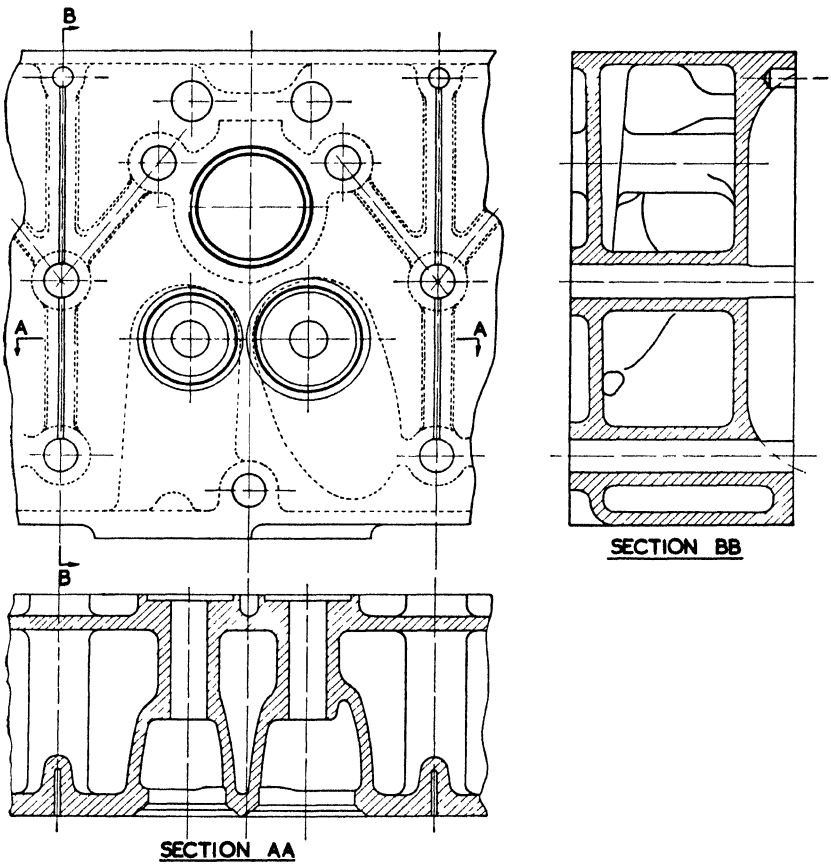

Fig. 13.12.—Section of cylinder head showing slots in lower deck to allow of thermal expansion

water, but at the high duties at which engines operate to-day this is not nearly sufficient and it is quite essential to ensure that the coolant shall flow at high velocity over all those regions where the heat flow is intense, i.e. around the upper end of the cylinder bore, over the whole deck of the cylinder head and around and between the valve seatings and injectors. Not only is a high-velocity flow essential in order to remove any boundary layer and steam bubbles, but it is essential also

to scour away any accumulation of scale or other deposits which may collect and form a very effective insulating layer at any point where the coolant has become stagnant. The designer is confronted, therefore, with the difficult problem of having to maintain a flow of coolant at high velocity over all those zones where the heat flow is intense, and to achieve this amidst a forest of bolt bosses, internal pipe-work, etc. He will do all he can by the provision of suitable baffles or ducting and, if necessary, by the provision of internal piping (figs. 13.13 and 13.14). At best, however, he can make only an intelligent guess at the flow path the coolant will actually follow and, in the author's experience, when designing a new cylinder head, it is always well worth while, in the first sample casting, to explore fully the actual flow path and velocity by means of Pitot tubes inserted into all the more vital places. Frequently it will be found that a more or less stagnant zone exists at some quite unexpected and vulnerable spot, due probably to the effect of some back eddy or unsuspected counterflow.

From the point of view of heat distribution it would appear, at first sight, that an aluminium cylinder head would be preferable on account of its much higher thermal conductivity, but while this is about three times that of cast iron, so also is its thermal expansion and the distortions due to thermal expansion; thus we lose on the swings much or all that we gain on the roundabouts. Also, since its modulus of elasticity is only about one-third that of cast iron, it is liable to be crushed out of shape by the holding-down studs, unless the bosses for these are made correspondingly larger, thus still further obstructing the circulation of the coolant.

While the detail design of a detachable cylinder head presents perhaps the most difficult problem of all, that of the upper end of the cylinder block requires equally careful attention. Here the essential conditions are:

(1) That the bore of the cylinder or liner must not be distorted by the pull of the holding-down studs.

(2) That the free circulation of coolant round the upper end of the bore or liner shall not be obstructed.

(3) That the circulation of coolant shall be carried as nearly as possible to the top end of the bore.

It is by no means easy to reconcile these conditions with the presence of highly stressed head bolts, studs, or set screws, spaced at relatively wide and perhaps irregular intervals from the cylinder barrel and necessarily in very close proximity to the cylinder bore. Clearly the more numerous and the smaller the bolts, the better from the point of view of distortion.

It is common practice to provide in the cylinder-block casting deep

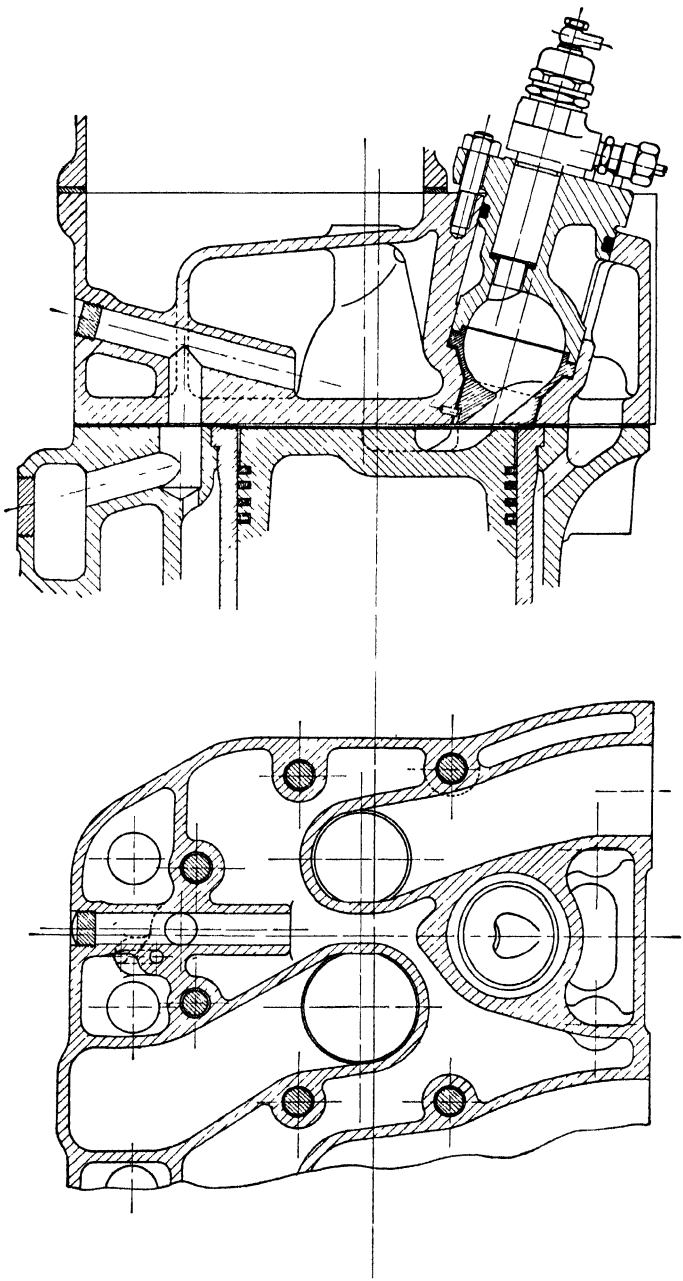

Fig. 13.13.—Section of cylinder head showing directed water circulation

bosses for the reception of these studs or set screws and, except in the case of a wet liner, to merge these bosses into the actual cylinder barrel. The alternative is to make the upper deck of the cylinder block of such

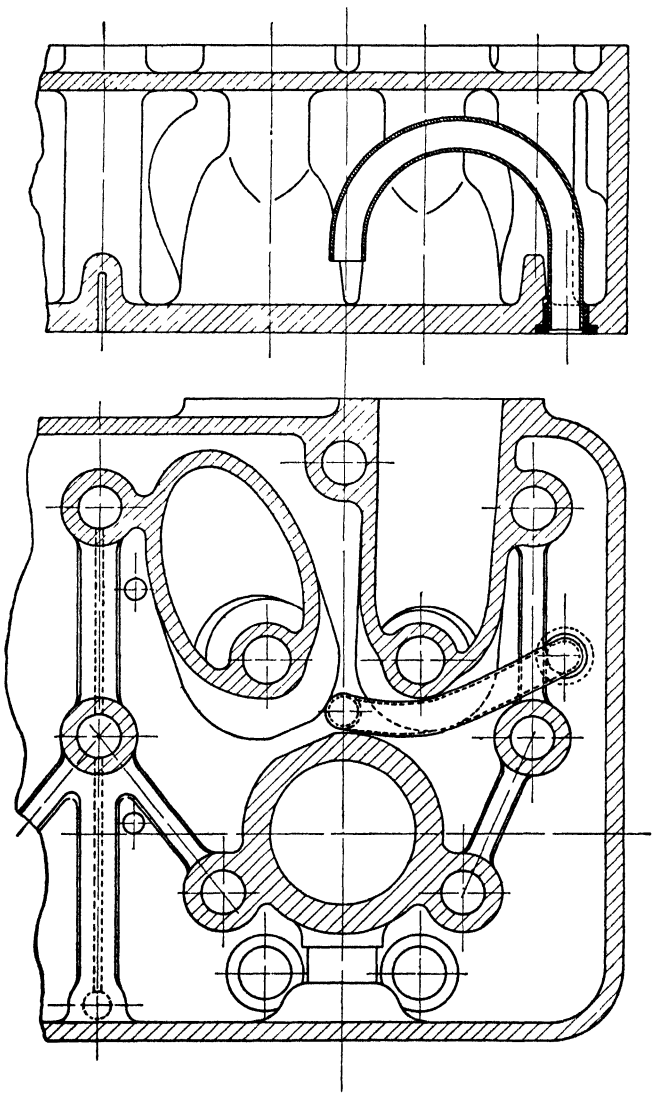

Fig. 13.14.—Section of cylinder head with internal pipe

thickness all over that no individual bosses are needed. Neither alternative can be described as desirable. If individual bosses are used, then not only is the free flow of the coolant obstructed, and that at a very vital zone, but there is always the danger of a steam lock developing

between any pair of bosses due to inadequate or obstructed venting. There is the danger, too, that under pressure, or thermal stresses, or both, the bosses may tend to press in upon and distort locally the cylinder liner, causing vertical corrugations. On the other hand, if the deck is made of uniform thickness adequate to receive the studs or set screws, and that without allowing them to break through into the water space, the thickness becomes such as to render condition (3) unattainable. Also, the combined thickness of the two decks becomes excessive and that at a zone of maximum heat flow. Of the two evils the author is inclined to prefer the uniform thick deck with no bosses as being less liable to cause distortion of the cylinder bore. Consideration of such problems leaves one with the conclusion that there is much to be said in favour either of integral cylinder heads or of some less conventional designs such as those shown in the previous chapter. Pistons and piston-rings can face up to a good deal of wear or even ovality of the cylinder bore but they cannot cope with vertical corrugations.

All the above considerations relate more especially to compression-ignition engines; in the case of petrol, the problem, though much the same, is considerably easier both on account of the lower gas pressures, the more uniform distribution of heat, and the greater latitude in the positioning and spacing of the valves, sparking-plugs, etc. In the petrol engine the two zones of intense heat flow are in the neighbourhood of the exhaust-valve seating and the sparking-plug, but since these can be fairly widely separated and raised above the flat deck, their cooling is much more easily catered for.

CHAPTER XIV

Pistons and Piston Cooling

In all internal-combustion engines, large or small, the piston is invariably the most vulnerable single member. It is, together with its piston-rings, also the one member which costs most dearly in mechanical friction.

In any high-speed four-cycle engine it is imperative that the piston should be as light as possible, for its acceleration and deceleration constitute the bulk of the mean loading on the crankpin, and its resolved inertia forces the bulk of the mean loading against the cylinder walls.

Yet again, from the point of view of dynamic balance, the inertia of the piston assembly constitutes the main disturbing force. From every aspect, therefore, it is essential to keep the weight of the piston down to the lowest possible limit.

The piston has to receive on its crown, and to transmit via its gudgeon-pin, the whole of the gas pressure exerted in the cylinder and to do this without any appreciable distortion.

It has also to receive, and to dispose as best it can, of a very considerable proportion of the heat of combustion.

Together with its rings it must form a gas-tight seal and, at the same time, prevent the passage of excessive oil into the combustion chamber.

It has to operate over a very wide range of temperature and since its heat capacity is small, it may reach a high temperature, while the cylinder in which it is moving is still relatively cold.

While it receives heat over the whole surface of the crown, it can dispose of that heat to the cylinder walls only around its circumference, hence, unless oil-cooled, it must either be made of a material of high thermal conductivity, or be of sufficient thickness to transfer the heat, or both.

The two conditions of light weight and high thermal conductivity are best met by the use of an aluminium alloy, but such alloys are open to the objections:

(1) That their thermal expansion is nearly three times that of cast iron, which necessitates a large working clearance, sufficient to meet the extreme case of a very hot piston in a cold cylinder.

(2) That their physical strength, at the best of times relatively low, depreciates with increase of temperature and, catastrophically so, when the temperature exceeds about 400° C.

(3) That the material is relatively soft and, as such, liable to be chafed or torn by hard particles of carbon deposit, or hammered down by the pounding of the piston-rings in their grooves.

It would seem that the only practicable alternative to the use of aluminium for the pistons of high-speed high-duty engines is that of a very thin cast-iron piston depending for its heat transference on really efficient oil cooling; for this there is much to be said, but of course the very life of such a piston must depend on the maintenance at all times of the circulation of coolant, for with so small a heat capacity in the crown even a momentary interruption may result in overheating and breakdown by seizure or cracking.

The subject of piston friction and of its conditions of lubrication, etc., is discussed in Chapters IX and XV in reference to mechanical efficiency and to cylinder wear.

Temperature Control and Distribution

Let us consider next the question of permissible temperatures and of temperature distribution as they relate to an aluminium-alloy piston.

In the first place the heat flow from the gases to the piston at full load amounts, in the case of a spark-ignition engine, to about 8–10 per cent of the B.H.P., and in that of a compression-ignition engine to approximately 15–20 per cent of the B.H.P., the great increase in the latter case being due, in part, to the greater density and more active movement of the air, and, in part, to the fact that in most forms of C.I. engine either the whole or a part of the combustion chamber is embodied in the crown of the piston. As a rough generalization we can say that the piston temperatures will be the same in a spark-ignition and in a compression-ignition engine when the former is developing double the power of the latter, also that, so far as piston temperature is concerned, it matters not whether the power is attained by high mean pressure or high speed.

In face of this large inflow of heat, we must somehow contrive to keep the temperature in any part of the crown below about 400° C., or run the risk of cracking or complete rupture.

While the limiting temperature of the crown is controlled primarily by the physical strength of the material, there are other zones in the piston where the temperature must be restricted to a very much lower level, namely, the piston-ring grooves and the gudgeon-pin bearing bosses.

With normal parallel-sided piston-rings, normal hydrocarbon lubricants and normal side-clearances, ring sticking is liable to occur if the

temperature of the top ring groove for long exceeds about 200° C., or perhaps it would be more correct to say that there is no risk at all of ring sticking so long as this temperature is not exceeded and little, if any, risk if it is exceeded only intermittently. If the temperature at this zone be allowed for long to exceed about 220° C., ring sticking will occur sooner or later; if it exceeds 230° C. it will occur within a very few hours. Still using parallel-sided rings we can postpone the onset of ring sticking by:

(1) Making use of a detergent oil.

(2) Giving the rings an abnormally large side-clearance in their grooves, thus allowing them some freedom to rattle up and down and so dislodge the partially oxidized or carbonized oil before it has time to harden and lock them. The extent to which we can afford to do this is, however, very limited, for with relatively soft aluminium pistons the rings, if they have too much initial side-clearance, will, in time, hammer down the lands and so develop an altogether excessive side-clearance, or destroy the lower and vital sealing face of the land.

Both the above remedies must be regarded rather as palliatives and are effective only when the temperature of the ring groove is near the border-line, as it generally is in the case of most C.I. engines.

By far the most effective remedy yet found against ring sticking is the development, by Napiers some 25 years ago, of the taper-sided or wedge-shaped ring which serves, at every tilt of the piston, to displace and squeeze out the partially carbonized oil (see fig. 14.1). This development proved the salvation of the high-powered aero-engine, in which it was virtually impossible to keep the temperature at the top ring groove below about 240–250° C. From the author's experience it would seem that the taper-sided ring will allow of the temperature at the ring groove being increased by from 40°–50° C. without risk of ring sticking.

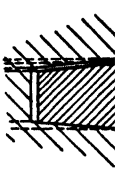

Fig. 14.1.—Taper-sided piston-ring

Apart from ring sticking, the temperature at this zone must be kept down, or there will be a tendency for hard carbon to form in the bottom of the ring groove and build up until the rings are packed out bottle-tight against the walls of the cylinder, with consequent high friction, heavy wear, and risk of severe scuffing or seizure. This complaint is much more prevalent in compression-ignition than in petrol engines; it appears to be a function of temperature in both cases, but is liable to occur at a lower temperature in that of the C.I. engine, possibly because the latter is operating always with a large excess of oxygen in the working fluid.

In most normal circumstances, and when using parallel-sided rings, ring sticking will occur before packing out, and, of course, once the

ring has stuck it cannot become packed out, but when using taper-sided rings or a very large side-clearance, packing out is liable to forestall ring sticking. So far as the author has been able to ascertain, packing out seldom occurs at temperatures below about 230–240° C. in C.I. engines, and perhaps some 10–20° C. higher in the case of petrol engines, but it is difficult to generalize since much depends both on local conditions and on the stability of the lubricating oil.

Again, if the ring-groove temperature exceeds about 250° C. severe wear or pounding down of the sides of the groove is liable to occur, more especially if the rings have a large initial side-clearance. Such "wear" is due rather to hammering of the ring against the sides of the groove and is, of course, aggravated by the softening of the material at elevated temperatures.

As a result of a very large number of temperature measurements under a wide variety of operating conditions, it would seem that, so long as the ring-groove temperature can be kept down to 200° C., no trouble need be anticipated from ring sticking, packing out, or ring-groove wear, but that if this temperature is much exceeded, and that for prolonged periods, then it becomes necessary to employ such expedients as the use of detergent oils, taper-sided rings, cast-iron ring-carrying inserts, etc. By making full use of all such aids, the safe limiting temperature can be raised to about 250° C., but this would appear to be about the upper limit for a light-alloy piston. For the same piston, a rise in temperature at the ring belt from 200° C. to 250° C. corresponds, in the case of liquid-cooled engines, to an increase of power output of the order of 80 per cent.

The third critical factor is the temperature of the gudgeon-pin bosses. Experience with both high-duty C.I. and spark-ignition engines has indicated that unless the temperature of the bosses is kept below about 260° C.–270° C. the material will tend to give way under pressure, and the bore of the boss to become enlarged and oval due, not to wear, but rather to crushing, but in this case much, of course, depends upon the maximum pressure; clearly the lower the pressure, the higher the permissible temperature at this region.

Here the designer finds himself "between the devil and the deep sea". On the grounds of structural strength, lightness, and rigidity, he wants, of course, to transmit the load from the crown to the gudgeon-pin bosses by the shortest and most direct route, i.e. by direct struts from the crown to the inner face of the bosses. On the grounds of heat flow he wants to make the route as tortuous and attenuated as possible and, as usual, he has to make the best compromise he can between these conflicting conditions. Where space and weight will permit, he will put as much distance as he can between the crown and the gudgeon-pin, but this, of course, entails correspondingly more engine height and weight which, in the case of an aero-engine, is quite inadmissible.

With uncooled aluminium pistons of normal design and proportions, the limiting factor is usually the temperature of the top piston-ring groove. Excessive temperature at the centre of the crown can usually be avoided by providing sufficient thickness of metal to spread the heat radially; it becomes a limiting factor only when striving after the lightest possible design. Excessive temperature at the gudgeon-

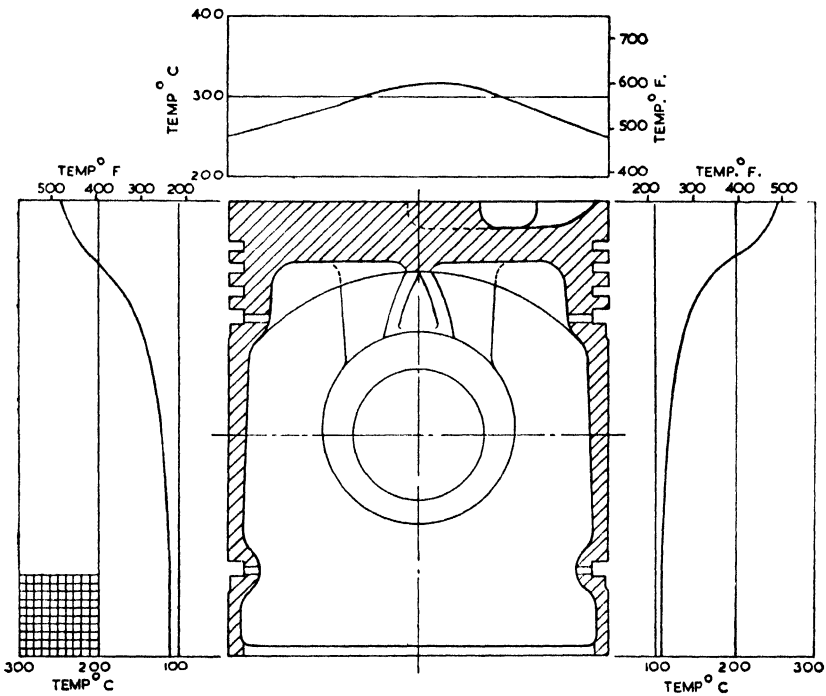

Fig. 14.2.—Typical temperature plottings from an uncooled piston

Test conditions:

Engine, bore $4\frac{3}{4}$ in. × stroke $5\frac{1}{2}$ in.
Speed, 2000 r.p.m.
B.M.E.P., 112 lb. per sq. in.
27·5 B.H.P. = 1·55 H.P./sq. in. of piston area.
Water jacket temperature, 70° C. (158° F.).
Lubricating oil temperature, 60° C. (140° F.).

pin bosses becomes a limiting factor only when conditions are very severe, such as very high gas pressures, or when, for reasons of weight or space, as in aero-engines, the distance between the crown and the gudgeon-pin must be kept as short as possible.

Taken by and large, the author's experience would indicate that within the range 3 to 6 in. diameter, a normal design of aluminium piston of the most suitable alloy available, with normal parallel-sided rings and normal undoped lubricants, should be found quite satisfactory in a C.I. engine, so long as the sustained power output does not

exceed about 20–25 B.H.P. per piston or, in a petrol engine, about 40–50 B.H.P. per piston, but that if these powers are exceeded for any long spells, it then becomes necessary to resort to such expedients as taper-sided rings, etc., or to oil cooling or both. In large and relatively low-speed engines, considerably higher powers are permissible with uncooled pistons for, in such cases, reciprocating weight is less important and heat can be distributed and dispersed by the use of lavish thicknesses of metal.

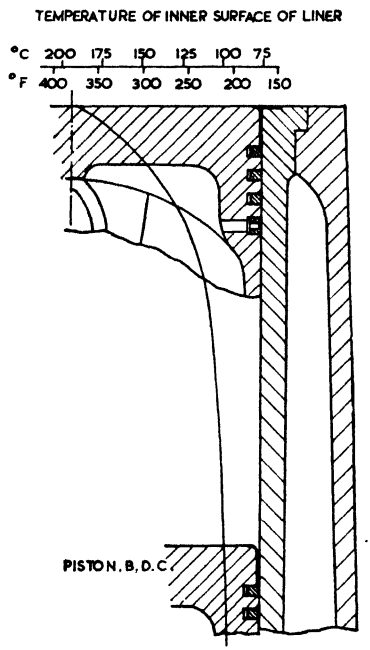

Fig. 14.3.—Typical temperature plottings of inner surface of liner

Test conditions:

Engine, bore $4\frac{3}{4}$ in. × stroke $5\frac{1}{2}$ in.
Speed, 2000 r.p.m.
B.M.E.P., 112 lb. per sq. in.
27·5 B.H.P. = 1·55 H.P./sq. in. of piston area.
Water jacket temperature, 70° C. (158° F.).
Lubricating oil temperature, 60° C. (140° F.).

In the case of high-powered military aero-engines, powers of over 200 H.P. per piston have been achieved, but these apply only under take-off or combat conditions and therefore for relatively short periods, for such engines are seldom called upon to cruise at more than about 40 per cent of full power. Again, in such engines, either very rich mixtures or water injection are employed when operating at maximum power, either of which expedients, and more especially the latter, tends to reduce considerably the heat flow to the pistons and cylinder

walls. In such cases every known expedient, such as taper-sided rings, etc., is resorted to; moreover, such pistons are generally oil-cooled, at least to the extent of oil squirts directed on to the gudgeon-pin bosses.

Even to-day little is known as to the mechanism of heat transfer from the pistons to the cylinder walls. Plottings of temperature contours all indicate that the bulk of the heat is transmitted via the piston-rings, for by far the steepest temperature gradient is to be found always in the ring pack, while that along the length of the skirt is relatively very slight. Fig. 14.2 (p. 260) shows typical temperature plottings from an uncooled piston, while fig. 14.3 shows a similar plotting of the inner surface (or rather of within 0·015 in. of the inner surface) of the liner when operating at the same speed and power output, with cooling water at 70° C. and a velocity of flow of the coolant around the liner of about 0·5 feet per second; from a comparison of these two figures it will be seen that the mean temperature difference between the skirt of the piston and the inner surface of the liner is relatively slight, hence the heat transference in that region must be small, and that most of the heat must be transmitted via the piston-rings. That this should be so is somewhat surprising seeing that the heat must pass from the piston to the rings and from the rings to the liner walls via two oil films, but all experience indicates that an active oil film is a very efficient convector of heat, as shown in the case of sleeve-valve engines.

Methods of Piston Temperature Measurement

Much controversy has always raged as to the best methods of measuring and recording piston temperatures. Of those in vogue the favourites appear to be:

(1) Tests of the Brinell hardness of the material, the change in Brinell hardness being a measure of the maximum temperature attained by any part of the piston.

(2) The use of temperature-sensitive paints which change colour at various temperatures.

(3) The use of contact thermocouples, embedded in the piston and making contact against spring-loaded pads or buffers at the outer end of the piston's stroke.

(4) The use of fusible plugs embedded just below the surface of the piston.

Of these methods the author prefers the last two.

The Brinell hardness test is, in the author's experience, very unconvincing and unreliable. It relies on the fact that the Brinell hardness of an aluminium alloy changes permanently after being subjected to a certain temperature, and that the maximum temperature attained can be deduced from the observed change in hardness. This would be all

very well if the initial hardness were known, but this can be determined only by cutting up the piston into sections, after which of course it is unusable. On the assumption that, before use, the Brinell hardness is uniform throughout, this method might be acceptable, but such an assumption is quite unwarrantable, for tests on sections of an unused piston show quite wide initial variations in Brinell hardness. Again the time factor plays a significant part which adds yet another element of uncertainty. Apart from its unreliability, this method is open to the obvious objection that every temperature measurement involves the destruction of a piston.

Temperature-sensitive paints have the advantage that they can be applied very quickly and easily and, of course, without any damage to the piston. They are, however, open to the objections:

(1) That, at best, they provide only a very approximate estimate of the surface temperature.

(2) That they are sensitive to the time element and care must be taken, when comparative tests are made, to ensure that they are of the same duration.

As a somewhat rough-and-ready guide to the order of temperature prevailing at any particular zone of the piston, they are certainly very useful and convenient, but for absolute measurement of the temperature, they need a very carefully controlled technique.

The third alternative, namely the contact thermocouple, has, of course, the very great advantage that the temperature can be observed while the engine is actually running, and the effects of changes of speed or mean pressure or of any other factor can be watched and recorded. The disadvantages of this method are that the number of thermocouples that can be installed in a piston and connected up to the contact buffers is necessarily very limited; also some uncertainty always exists as to the reliability of the calibration. The thermocouples can, of course, be calibrated accurately under static conditions, but to what extent that calibration may be disturbed when operating under intermittent conditions and when the contact points are flooded with oil is always a matter of some uncertainty.

The fourth alternative, namely the use of a number of minute fusible plugs embedded just below the surface of the metal, is probably by far the most accurate where absolute temperature measurements are required, and since there is no limit to the number of such plugs, it is always possible to obtain temperature contours over the whole or any part of the piston.

The limitations of this method are:

(1) The range of melting-point of the various eutectics used for these fusible plugs is somewhat limited, and there are some rather

wide gaps in the range. This, however, matters little if a sufficient number are installed.

(2) It records, of course, only the maximum temperature reached at any zone of the piston.

(3) It necessitates the removal and examination of the piston after each test.

(4) Unless one knows in advance approximately what temperatures one is likely to expect in each zone, it is impossible to select, in the first instance, fusible plugs with suitable melting-points. Such knowledge is, however, soon gained by experience or, in the case of some extreme or exceptional condition, can be gauged approximately from a preliminary test with temperature-sensitive paints. The usual practice in the author's laboratory is to embed groups of fusible plugs in a row across the crown of the piston, down the thrust and non-thrust sides and, on occasion, in the gudgeon-pin bosses, each group consisting of three plugs of different melting-points, differing when possible by not more than about 10 to 15° C. If the selection has been a judicious one, then it will be found that out of each group either one or two have melted out and the third remains intact. If none have melted or all three of a group have gone, the gap in the measurement can usually be bridged by the behaviour of those in adjacent groups, but with experience it is generally possible to avoid such gaps. As in all such methods, considerable experience is needed to acquire the right technique in both selecting and securing the plugs, but once this has been gained, the procedure is simple, though somewhat tedious.

Where a very thorough investigation is called for, the author prefers to use, simultaneously, both fusible plugs and contact thermocouples, the former to provide a check reading of the absolute temperature and so serve also as a calibration for the thermocouples, and the latter to indicate the effects of changes in the running conditions.

All such investigations tend to underline the desirability of oil cooling, even for quite small pistons. By so doing and thus ensuring that no part of the piston shall ever reach a critical temperature, it becomes possible to make a lighter and stiffer piston since not only is the design unfettered by thermal and heat-transfer problems, but, if the temperature throughout can be held down to a reasonably low figure, a higher fatigue strength can be relied upon and therefore lighter scantlings employed.

This conclusion led some 10 years ago to an investigation into the mechanism of oil flow through fast-moving pistons, the upshot of which is dealt with later.

Piston-rings

The primary purpose of the piston-ring is, of course, to seal the piston against gas leakage. More than a century has passed since the Ramsbottom ring was first introduced, and, in all essentials, it has remained unchanged to this day.

It has been emphasized elsewhere in this volume that such a ring can function only when the gas pressure behind it is equal or very nearly equal to that above it. Unless this condition be fulfilled the ring will collapse inwards and cease to function as a gas seal. It is essential therefore that the gases above shall have free access to the back of the ring (see fig. 14.4).

A piston-ring seals against gas pressure:

(1) By its radial bearing against the walls of the liner.
(2) By its bearing against the lower face of the ring groove.

Both are vitally important, but the importance of the second is sometimes overlooked.

So long as parallel-sided rings are used, it is a fairly simple matter to ensure a really good sealing-face both on the side of the ring and on the lower face of the groove, but when taper-sided rings are used, this is not so easy.

In the first place, the side faces of the rings cannot so easily be lapped, while there is always the danger that the angle of taper may not be exactly the same in the ring and the groove. In practice it is found best to make the taper of the lower ring land about 0·5° less than that

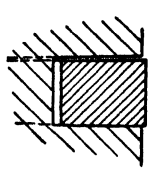

Fig. 14.4.—Access of gas to back of ring

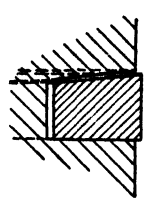

Fig. 14.5.—Ring tapered on upper side only

of the ring to facilitate quick bedding-down. Because of this difficulty the author prefers, whenever possible, to employ rings tapered on the upper face only (see fig. 14.5); such rings are not quite so effective against ring sticking as the double-taper type, though very nearly so, but they have the advantage that the vital lower sealing-face is flat.

Spring Tension. The initial spring tension of the ring is not very important, since the radial pressure is exerted for the most part by gas pressure. It becomes of importance, however, when the cylinder is badly worn, for during the idle strokes we depend upon the ring tension

to ensure that the rings keep in sufficiently good contact with the bore to maintain oil control even though the latter has become tapered or bell-mouthed. The tendency in recent years has been to increase the spring tension from about 7 or 8 to 12 lb. per sq. in., but an upper limit is soon reached when any further increase in radial thickness will result in permanent distortion due to over-stressing the material when the ring is sprung into place. In the case of the oil-control rings, the unit pressure can always be increased to any extent by the simple expedient of reducing the area of the radial bearing surface.

Side-clearance. It is essential to provide, initially, sufficient side-clearance to allow of the gas passing freely to the back of the ring and, at the same time, to keep the capacity behind the ring as small as possible. If this is not provided for, the ring will collapse inwards and fail altogether to seal. On the other hand, if too much side-clearance is provided the ring will hammer up and down between the sides of the groove, and, in an aluminium piston, will wear or pound down the surface until the clearance becomes excessive, and the lower land sometimes broken away. In the case of iron pistons or where cast-iron inserts are used in an aluminium piston this trouble does not arise and an ample side-clearance can be provided with impunity.

In cases of ring collapse it is generally found that if the top ring " lets go " all the other gas rings will follow suit, presumably because once the full pressure has got past the first ring, the others, having been protected from the rise of pressure during the compression stroke, are caught unawares before there is time for sufficient gas pressure to build up behind them. Similarly, if the top piston-ring is gummed up and so rendered inoperative, the remaining gas rings will not effectively prevent " blow-by ", but, in this case, they will not collapse completely, presumably because the stuck top ring is still a sufficiently close fit in the bore to prevent any very rapid build-up of pressure above them. In the crosshead-piston engines which the author designed for the tanks during the 1914–18 war, aluminium pistons were used but, in those days, it was thought essential, when using aluminium, to keep side-clearance of the rings as small as possible with the result that ring collapse was at first troublesome. In these engines the underside of the pistons could be observed through inspection doors in the crosshead chamber. When collapse occurred, showers of sparks and even flame could be seen from round the circumference of the piston, accompanied by a loud barking noise. As a temporary remedy notches were filed in the top face of the piston-ring; as a permanent remedy the side-clearance of the top ring was increased by from 3 to 4 thousandths of an inch, and either or both proved completely effective, no further trouble being experienced. Purely as an experiment, however, holes were drilled in one piston through the back of the top ring groove, thus relieving all pressure behind the ring, with the result that ring collapse

assumed such violent proportions that within a few seconds the top piston-ring had broken into small fragments.

Ring Flutter. It is a common experience that at a certain critical speed, usually a very high speed, piston-ring collapse will occur accompanied by violent blow-by. This phenomenon was always, though quite wrongly, attributed to ring flutter, that is to say, to a radial vibration of the ring. It remained for Paul Dykes to demonstrate by a most brilliant piece of research technique that the cause of collapse could be explained quite simply. In normal circumstances, as the piston rises on the compression stroke, the ring is held, at first by inertia, and later by gas pressure, against the lower face of the groove; thus the full clearance is available above the ring to allow the gas to enter freely and so build up pressure behind the ring while the lower face is sealed. At some critical speed, however, the inertia of the ring will exceed both the friction and the gas pressure during compression, with the result that the ring will then bear against the upper face of the groove and thus both seal off any further access of gas to the groove itself and, at the same time, release any pressure that may already have built up. Under such circumstances the ring will collapse. It is obvious that the speed at which this will occur is a very high one, in the case of Dykes' experiments about 5500 r.p.m. It is obvious also that the narrower the ring the less its inertia and therefore the higher the critical speed at which collapse will occur.

Width of Rings. There is wide diversity of opinion as to the optimum width of piston-rings. Those who favour relatively wide rings will argue, with logic at any rate, that the wider the ring face the less chance is there of the oil film being squeezed out when boundary lubrication obtains at the end of the stroke, and therefore the less tendency to liner wear. On the other hand, the wider the ring the greater its inertia and therefore the greater its tendency to hammer down the ring lands of the piston; also the wider the ring the greater the capacity of the cavity behind it and therefore the longer it will take for pressure to build up and so force it to seal. Thus there will be, at all times, a greater tendency for ring collapse with wide rings and this at a lower critical speed. Against the use of very narrow rings is their extreme fragility and the greater difficulty in ensuring a true face on the sides of the ring; moreover, there is some evidence, but not wholly convincing, that the very narrow ring does in fact cause greater liner wear.

Taking all the arguments into account it would seem that the width of the ring should depend on the normal speed of the engine; the higher the speed, the narrower the ring.

Width of Ring Lands. If the actual flame is allowed to impinge against the side of the top ring, it will both raise the temperature of the ring and so render it ineffective as a means of heat transfer and, at

the same time, by singeing the oil on its side face, will greatly increase its tendency to become gummed up. In order to obviate this we need a fairly deep and reasonably close-fitting top land above the ring. Owing to the high thermal expansion of aluminium and to the high temperature of the metal in the crown, we are compelled to allow a very liberal top-land clearance, generally from 0·4 to 0·6 per cent of the cylinder diameter, when measured cold. When the engine is run for prolonged periods at a comparatively light load and therefore with a large top-land clearance, carbon will build up on this land until most of the clearance is taken up. If now full load be applied and the piston at once dilates, all clearance will be taken up and the carbon layer will be forced so hard against the cylinder bore that it must either be dragged off or cause seizure of the piston. If the land is relatively shallow it will be dragged off, probably causing some scuffing of the top land in the process, but without any more serious damage. If, however, the land is deep enough, the tenacity of the carbon coating may be such as to cause a serious seizure; there is a limit therefore to the permissible depth of this land, and that limit is usually about 20 per cent of the diameter. In the author's experience, the best all-round compromise between ring sticking on the one hand, and risk of serious scuffing or even seizure on the other, is to be found when the depth of the top land is from 12 to 15 per cent of the diameter of the piston. Apart from scuffing, due to dragging of the carbon vest over the piston's head, another cause of top-land scuffing is the building-up of carbon in the cylinder bore, immediately above the point at which the top ring comes to rest. In this connection the author has found, experimentally at all events, that scuffing of the top land can be prevented by plating the crown and top land of the piston with hard, as opposed to porous, chromium. On the one hand, carbon will not adhere so tightly to a hard chromium surface; on the other, the surface is too hard to be damaged by carbon. It remains yet, however, to be proved whether the chromium-plating will, in time, part company from the aluminium and flake off, with probably disastrous consequences.

The width of land below the top ring must be such that it shall be able to withstand, without any measurable deflection, the full gas pressure acting on the side of the ring; it must be sufficient also to withstand the hammering it will get from the up and down movement of the ring. To this end its width should be not less than about 3·5 per cent of the diameter. As to the lands between the lower gas rings, these are subjected normally to very little load, and, since their side-clearance can be less, to less hammering, and their width is determined rather by manufacturing expediency. Fig. 14.6 shows to scale the proportions which, in the author's experience, represent about the best compromise for a high-duty C.I. engine.

In the earlier days of the petrol engine when maximum pressures

were low, revolution speeds moderate and pistons relatively very light, a small amount of oil sufficed both for the lubrication and cooling of the crankshaft and big-end bearings but, as pressures and speeds increased, it became necessary, for the sake of cooling, to circulate through the bearings a very much greater quantity, and this at once aggravated the problem of oil control by the pistons. It ruled out of court, for instance, pistons of the slipper type whose friction was considerably lower than the full-skirted variety. Again, the shorter the stroke of the engine and the shorter the connecting-rod, the greater the proportion of the oil thrown off from the big-end bearing that will

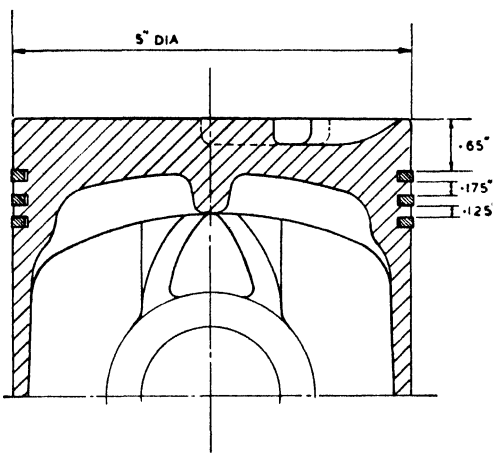

Fig. 14.6.—Piston-ring assembly

enter the cylinder. The problem of oil control became yet further aggravated by the larger working clearances needed in the journal and crankpin bearings when the harder bearing materials such as copper-lead were used.

In order to meet this difficulty, many types of oil control rings have been developed. In all, the basic principle is the same, that is to say, a high radial pressure is used to scrape surplus oil off the cylinder bore, and in addition, the ring itself is grooved and slotted or drilled in order to allow any oil which has passed the first bearing land of the ring to escape through to the back of the groove which is itself freely vented (see fig. 14.7).

In order to prevent any pumping of the oil by the up and down movement of the ring in its groove, either the side-clearance is kept down to very close limits, or, in some cases, the ring is divided and sprung axially as well as radially. Such rings can be very effective but they cost somewhat dearly in additional friction. The usual practice is to fit one such oil control ring immediately below the group of gas

rings but, in many cases, it is found essential to fit an additional oil control ring near the bottom of the skirt.

With the progressive increase in pressures and speeds the problem of oil control becomes daily more tiresome and, in the author's opinion, it is high time that we treated separately the functions of cooling and

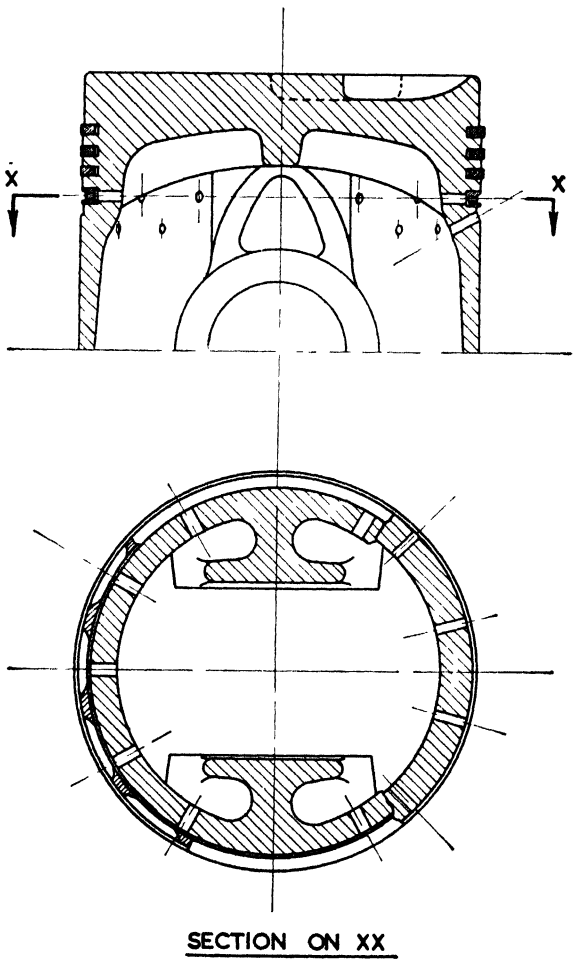

Fig. 14.7.—Oil control ring

lubricating the crankshaft bearings. The amount of oil required for lubrication alone is very small; that required for cooling the bearings very large and growing larger every day. It would seem, then, that the logical approach should be to keep the crankshaft cooled by a very large circulation of oil through it from end to end and allow only relatively little to escape into the bearings for lubrication. By such means

the crankshaft itself becomes the main oil manifold, much plumbing is eliminated and, above all, there is no need to cut any oil grooves in or to puncture the bearing linings.

Piston Cooling

With both the rapid increase in the power output of aero-engines during the later 1930s and that also of high-duty C.I. engines, the need for some form of direct piston cooling became acute. This led to a long series of experiments in the author's laboratory on ways and means for circulating cooling oil through the pistons of fast-running engines.

In the large open-type slow-running engines of fifty years ago, it was the general practice to cool the pistons with water circulated through telescopic or articulated pipes. With the advent of enclosed forced-lubricated engines, the use of water was looked upon with suspicion on account of the risk of leakage into the lubrication system, and oil was therefore substituted as a cooling medium. As rotational speeds increased, so the pressure on the cooling medium had to be stepped up in order to overcome the inertia of the reciprocating column of liquid. A practical limit, however, was reached when the pressure required to overcome inertia became excessive and other means had to be sought. The first step was the provision of a non-return valve at the base of the telescopic pipe, so that the oil flowed to the piston only when the inertia was in its favour; this proved moderately satisfactory, except that the non-return valve suffered severe hammering at high speeds, and the addition of large air vessels then became necessary.

In the case of very compact and really high-speed engines, it is impracticable on the score of space and other considerations to provide telescopic pipes leading to and from the piston; the connecting-rod becomes the only mechanical connecting link through which the cooling medium can be fed to the piston, while its return may be either down the connecting-rod again or by a free release into the crankcase.

In the first instance an attempt was made to carry the oil both up and down the connecting-rod, discharging it finally through the cap of the big-end bearing. This worked admirably up to a point, but was open to the objection that it was by no means easy to accommodate adequate passage-ways in the connecting-rod for a flow in both directions. The method of returning the cooling oil down the rod was therefore abandoned in favour of letting it discharge freely from the piston, after first ensuring that it was compelled to circulate at a high velocity both under the crown of the piston and round the back of the piston-ring grooves.

There appears to be little or no difficulty in achieving this in a simple manner provided that the necessary precautions are taken. The main requirements may be summarized as follows:

(1) It is, of course, absolutely essential that sufficient oil be fed into the crankshaft to supply the dual needs of the bearings and

pistons. To ensure this it is highly desirable to employ end-to-end lubrication, i.e. to feed the oil into the crankshaft at one or both ends rather than through grooves in the journal bearings. This arrangement has the further important advantage that it eliminates the need for any oil grooving in the narrow journal bearings and, at the same time, allows of thorough de-aeration of the oil by allowing any air to bleed from the centre of the core out into the journal bearings. Fig. 14.8 shows a scrap section of an oil-cooled crankpin and journal.

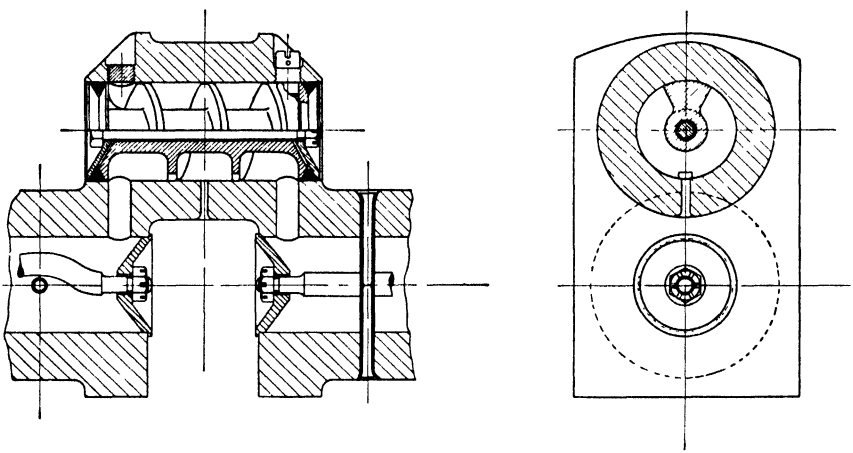

Fig. 14.8.—Oil-cooled crankshaft

(2) The inertia pressure set up by a column of oil in the connecting-rod far exceeds the normal oil pressure. Unless, therefore, some steps are taken to prevent it, there will be a return flow into the crank or crankpin bearing. This can be prevented either by the use of a non-return valve at the foot of the connecting-rod or by employing the crankpin itself as a rotary valve. The latter of course is preferable, in that it obviates the use of any additional or vulnerable moving parts.

(3) Since the oil from the crankpin is used both to lubricate the big-end bearings and to cool the piston, it is necessary to ensure that it does not do one at the expense of the other. This risk can be avoided by collecting the oil for the piston cooling from the least loaded area of the bearing.

(4) It is desirable, as far as possible, to avoid any leakage of air into the connecting-rod and to this end it is important to form as close a seal as possible between the small-end of the connecting-rod and the piston. This presents no difficulty, but it is a point which may be overlooked.

(5) The vital areas in a piston through or around which the coolant should be circulated are:

(*a*) the centre of the crown,

(*b*) the back of the piston-ring grooves,

(*c*) the top side of the gudgeon-pin bosses.

(6) The essential need is the removal of heat from the three zones mentioned above, to an extent which will keep their temperature well below the danger limits specified earlier on. This does not require the removal of any very large amount of heat, nor does there appear to be any advantage in reducing further the temperature of the piston.

Fig. 14.9 shows in detail the form of piston which, so far, has been found best in the case of exceptionally high-duty two-stroke C.I. or

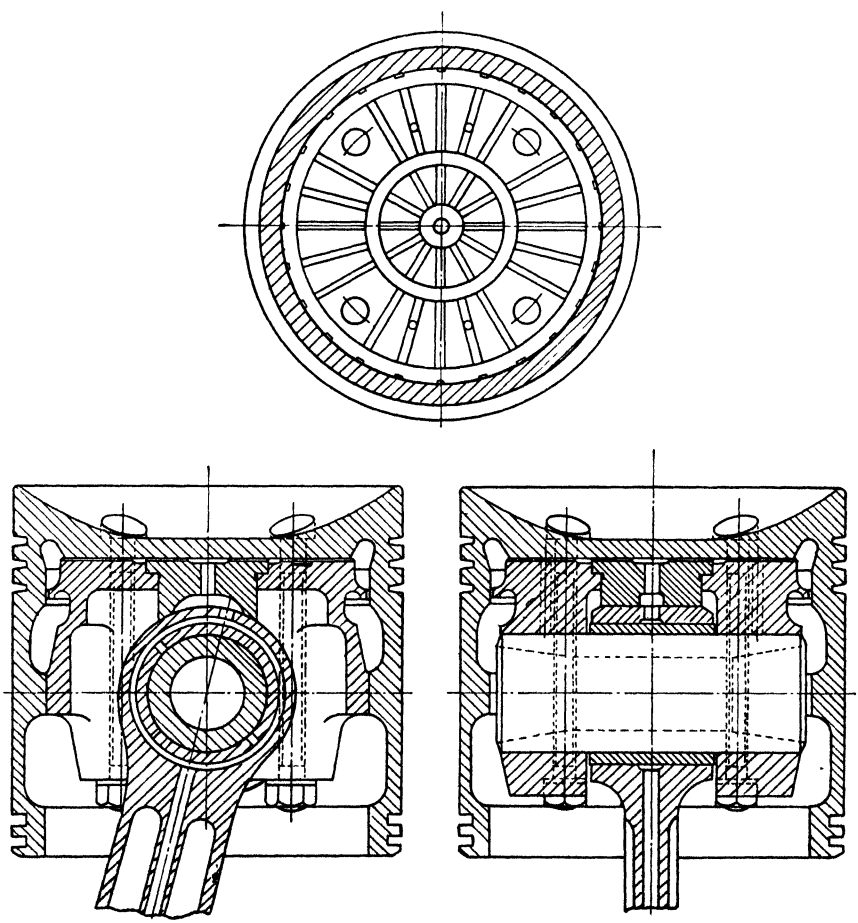

Fig. 14.9.—Composite oil-cooled piston for high-duty two-cycle engine

petrol-injection engines. It will be seen that the oil passes up the connecting-rod round the outside of the gudgeon-pin bearing to an outlet hole in the top of the rod. Sandwiched between the two members of the piston is the collector, whose lower face is machined concentric with the gudgeon-pin and which bears against the small-end of the connecting-rod. From the outlet in the top of the rod, the oil passes through the collector and thence through a series of shallow radial or spiral grooves formed in the upper flat surface of the inner member of the piston. After issuing from these grooves the oil enters an annular space behind the piston-rings formed between the two members. Escape from this annular space is restricted partially by a narrow land on the inner member so that a portion of the oil is retained temporarily. After passing the restricted area, the oil is free to escape through slots formed in the lower or fitting land. Visual observations with a transparent (Perspex) outer member show that when motored at the normal running speeds, the annular space is about half-filled and the oil therein violently agitated, as in a cocktail-shaker, thus scrubbing thoroughly the wall of the piston immediately behind the ring grooves. Cooling of the upper half of the gudgeon-pin bosses is effected by the flow of coolant through grooves above the bosses, and tappings are taken from two of these grooves to feed oil to the gudgeon-pin bearings.

Fig. 14.10 shows actual temperature readings taken from such a piston of 4·84 in. diameter when developing the very high output of 172 B.H.P. It had been found that a rate of flow of about 40 gallons per hour proved sufficient for outputs up to 200 B.H.P., or over 10 h.p. per sq. in. of piston area, when the engine was operating as a highly supercharged petrol engine, or for outputs up to 110 B.H.P. (the highest reached) as a supercharged C.I. engine.

No accurate data are available as to the amount of heat taken up by the oil during its passage through the piston. This is difficult to determine so long as the discharged oil from the piston cannot be separated from the rest of the lubrication blood stream, while, for obvious reasons, the same piston cannot safely be used at high loads without oil circulation.

From indirect evidence it appears, however, that the amount of heat taken from the piston by the cooling oil amounts to approximately 4 per cent of the B.H.P. when running as a petrol engine and about 8 per cent when running as a compression-ignition engine, at the same power output.

With a view to exploring further the problem of oil-cooling pistons, a rig was erected consisting of a disused single-cylinder engine of 5·5 in. stroke in which the existing piston was employed merely as a crosshead, and a second piston, a replica of the oil-cooled piston to be used, was mounted on a piston rod in such a manner that it projected well above the top of the cylinder. A collecting tray was fitted just

above the cylinder, but below the bottom travel of the upper or test piston. This tray served the double purpose of collecting such oil as passed through the test piston and preventing oil or air, displaced by the crosshead, from confusing the issue. In order to neutralize the effect of inertia of the oil column in the extension piston rod, a non-return valve was fitted at the base of this rod, i.e. at the point where, normally, the oil would pass through the grooves in the composite

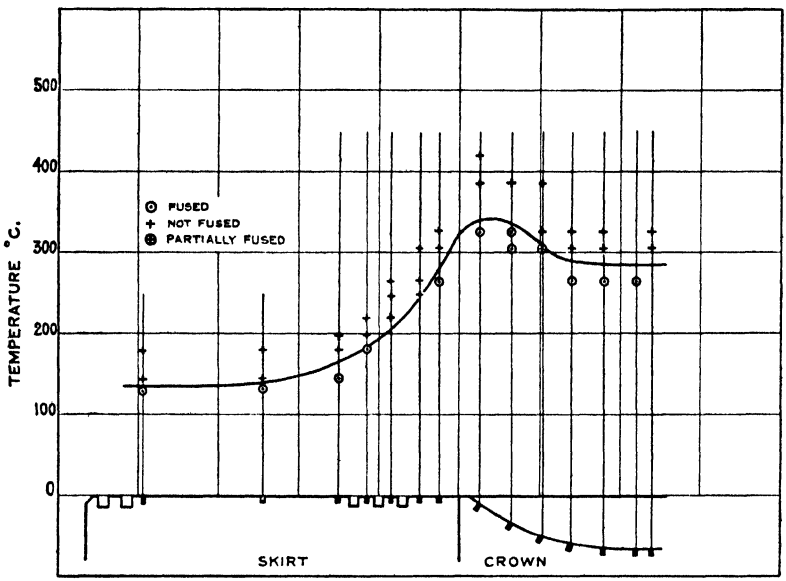

Fig. 14.10.—Piston temperature of two-cycle petrol-injection unit, bore 4·84 in. × stroke 5·5 in.

Test conditions:

Engine speed, 2750 r.p.m.	Fuel, 100 octane number.
B.M.E.P., (247 × 2) lb. per sq. in.	Oil for engine and sleeve, D.T.D. 109.
B.H.P., 172.	Water temperature, 70° C.
Exhaust back pressure, 8 lb. per sq. in.	Oil temperature, 70° C.–90° C.
Scavenge pressure, 34 in. Hg.	Air temperature, 73° C.

piston. The whole was enclosed in a sheet-metal helmet provided with glass windows through which the operation of the machine could be watched. The test piston used was a replica of that shown in fig. 14.9 except that the outer member was made of Perspex, through the transparent walls of which the flow of oil could be seen clearly, by the aid of a " Strobotac " and " Strobolux " stroboscope.

The complete rig was driven by a direct-coupled electric motor, capable of motoring it at speeds up to 3000 r.p.m. The connecting-rod was arranged so that oil could be fed up it from the crankpin:

(1) with a timed feed using the crankpin as a rotary valve,

(2) with a continuous feed, the return flow being prevented by means of a foot valve fitted in the shank of the rod immediately above the big-end bearing,

(3) with a continuous feed open to the piston throughout the cycle.

Oil, supplied by a separately driven pump, was fed into the crankshaft through one end, and such oil as escaped through the big-end bearing, etc., was withdrawn by a scavenge pump, measured and returned to the tank, while the oil which passed through the test piston fell into the tray, was collected, and measured separately. For test purposes a thin oil was used whose viscosity matched that of the actual engine oil at working temperature.

A very large number of tests were carried out under widely varying conditions and many useful design data were obtained. The salient points may be summarized as follows:

(1) It was found that with all conditions as in the actual engine, the flow of oil through the piston was in the region of 40–50 gallons per hour, and that this rate of flow remained substantially constant at all speeds.

(2) *Effect of varying the Time of Entry of Oil to the Hollow Connecting-rod.* For these tests a row of holes was drilled through the big-end bearing shell to register with the oil outlet hole in the crankpin. With all holes open, delivery into the rod could take place during a period of about 180 deg., i.e. from mid-stroke to top dead centre and on until midway on the downward stroke. Under a given set of conditions, variation of the timing effected by blocking up the holes produced the effect shown in fig. 14.11.

From this curve it will be seen:

(*a*) that the maximum flow is obtained with a delivery angle of about 180°,

(*b*) that reducing the angle reduced the flow to about the extent one would expect and that this appears to be by far the best and most positive way of determining the amount of oil to be circulated through the piston,

(*c*) that no advantage was to be gained by asymmetrical timing.

(3) Visual observation of the piston showed a considerable time lag between the registering of the openings in the crankpin and big-end bearing and the flow of oil through the piston; thus, at 2500 r.p.m., with delivery starting at 90° before T.D.C., no oil issued through the piston till about 30° before T.D.C., but that it continued to flow through the piston until about 180° after T.D.C., i.e. a time lag of about 60° at the start and 90° at the finish. As would be expected the commencement of flow at each revolution was very sharply defined, but the cessation trailed off gradually.

(4) *Effect of varying the Working Clearances.*

(*a*) Variations in the clearance of the big-end bearing over the practicable range from 0·0045 in. to 0·0066 in. had no measurable effect on the quantity of oil passing through the piston (see fig. 14.12), though the quantity escaping from the ends of the bearing did, of course, increase considerably.

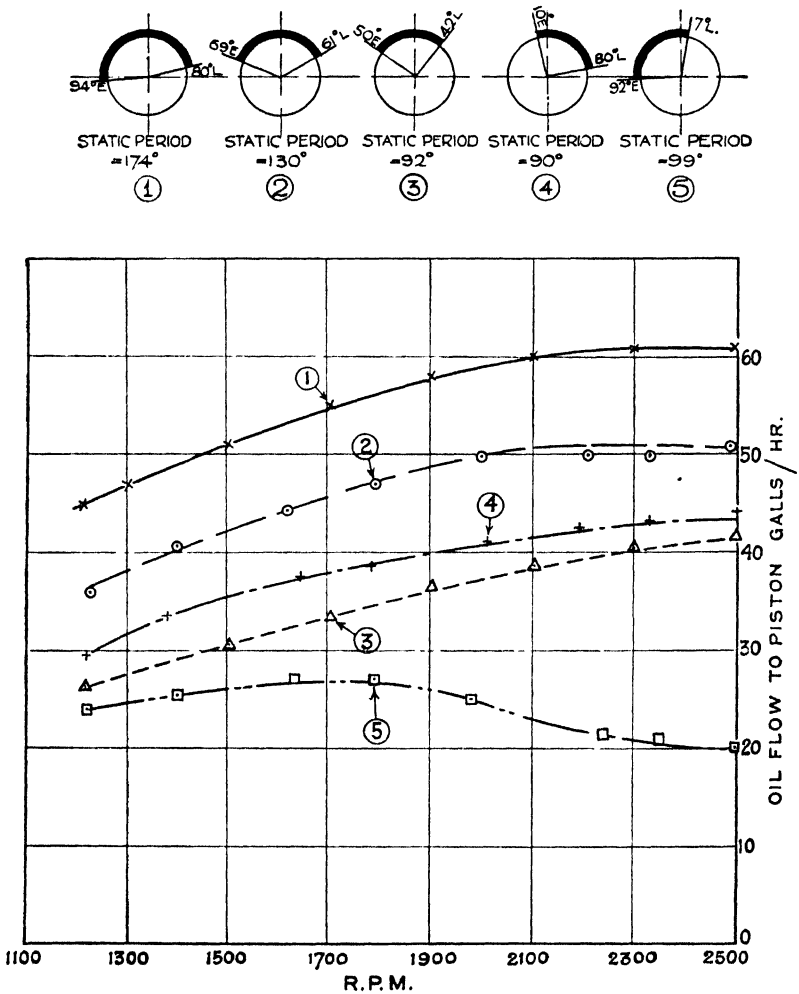

Fig. 14.11.—Effect of static period on flow of oil to piston of E18 engine
Oil pressure, 70 lb. per sq. in.

(*b*) Variations in the clearance of the gudgeon-pin bearing had a marked effect. As between the extreme practical limits of 0·0005 in. to 0·0045 in., the flow through the piston under a

given set of conditions decreased from 60 gallons to 42·5 gallons per hour.

(c) Variations in the clearance of the collector had also a very important influence, as shown by fig. 14.13. For the no-clearance condition a spring-loaded sleeve was fitted to the collector, bearing continuously against the small-end of the rod.

(5) *Effect of Piston Cooling on Normal Flow through the Crankpin Bearing.* Comparative tests at constant oil pressure, but with the passage-way up the connecting-rod blocked and unblocked at the big-end bearing, showed that, when oil is flowing to the piston, the quantity escaping from the ends of the bearing is but little dimin-

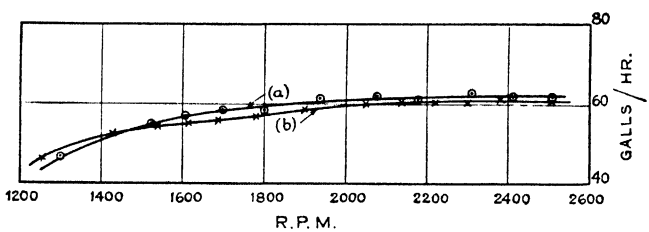

Fig. 14.12.—Piston oil flow with varying clearances

(a) Large big-end clearance, 0·0066 in. (b) Small big-end clearance, 0·0045 in. Oil pressure, 70 lb. per sq. in.

ished, while the total quantity flowing through the bearing (including that to the piston) is increased substantially; thus the big-end bearing also gains some substantial benefit in the way of additional oil cooling (see fig. 14.14).

(6) *Effect of Varying Oil Pressure.* The oil pressure supply to the crankshaft was varied over a wide range from 20 to 70 lb. per sq. in. with the result shown in fig. 14.15. It should be noted that the pressures recorded are those at the entry to the crankshaft, and do not take into account the pressure drop inside the shaft. This was estimated to be about 4–6 lb. per sq. in. at 2500 r.p.m.

(7) *Area of Passage-ways.* Previous experience of the running of engines with oil-cooled pistons had indicated that, for a rate of circulation through the piston of about 40 gallons per hour, the minimum area of the passage-ways up the rod should be of the order of 0·025 to 0·03 sq. in. (corresponding to a single hole 0·18 in. diameter). Some tests were made with the passage-ways around the gudgeon-pin and through the small end of the connecting-rod reduced from 0·03 to 0·01 sq. in.; this had the effect of reducing the flow through the piston in the ratio of 10 to 6·5 at 2500 r.p.m.

(8) Some tests were run with the connecting-rod passage blocked

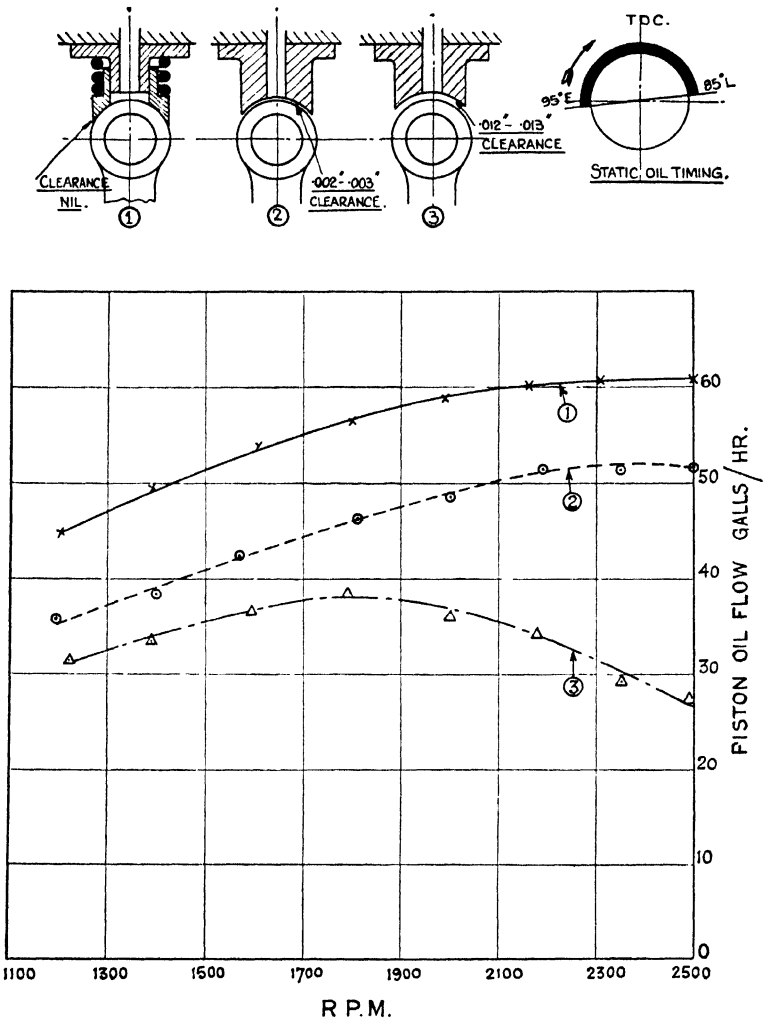

Fig. 14.13.—Effect of collector fit on oil flow to piston of E18 engine

Test conditions:

Three $\frac{1}{8}$ in. diameter oil holes open in top of connecting-rod.

Non-return valve in piston-rod as close as possible to collector.

$\frac{5}{16}$ in. diameter tube in piston-rod and in connecting-rod.

Oil pressure, 70 lb. per sq. in.

(1) × ——— × Spring-loaded collector.
(2) ○ — — — — ○ Good-fitting fixed collector (0·002–0·003 in. clearance).
(3) △ — · — △ Fixed collector packed by 0·010 in.

at the top or small end of the rod, leaving the long passage in the rod as a blind alley, or reservoir, open to the big-end bearing. The effect of this was to increase considerably the flow through the big-end bearing surfaces. This observation may in some cases be of

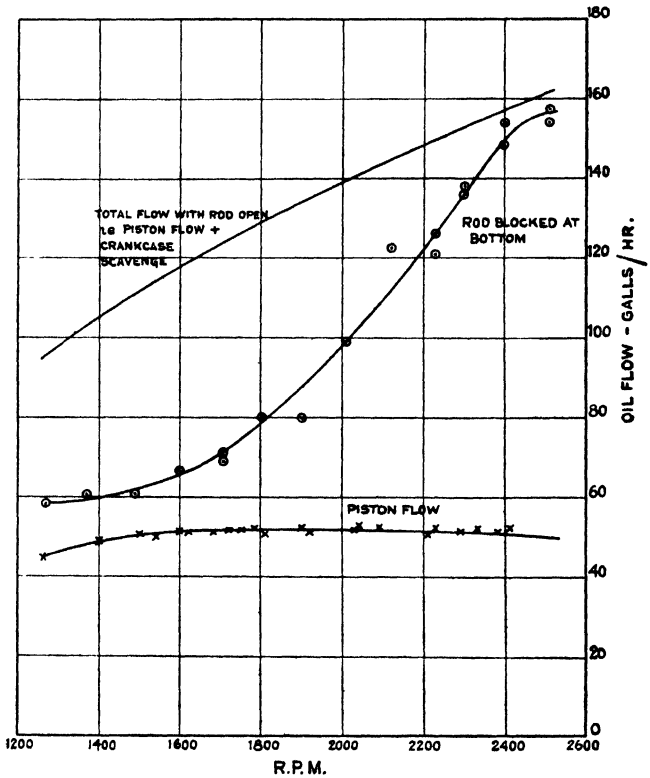

Fig. 14.14.—Oil flow with connecting-rod open and blocked at the bottom

Test conditions:

Static oil-flow timing, 95° B.T.D.C. to 85° A.T.D.C.
Spring-loaded collector.
Tubes, $\frac{3}{16}$ in. bore in both connecting-rod and piston-rod.
Non-return valve at bottom of piston-rod.
Small-end clearance, 0·003 in. (total).
Big-end clearance, 0·0045 in.–0·006 in.
Oil pressure, 70 lb. per sq. in.

practical importance, since it suggests a simple and ready means of increasing the flow through a big-end bearing or of equalizing the flow through a number of bearings on a multi-throw crank.

(9) Some tests were run with a continuous feed up the connecting-rod, i.e. without any controlled timing or non-return valve. The results were somewhat erratic and inconsistent, but in all cases the flow through the piston fell rapidly with increase of speed.

(10) Other tests were run with a continuous feed but with a

non-return valve at the base of the rod. These also were somewhat erratic, due probably to " flutter " of the non-return valve, but, in general, the flow through the piston was slightly greater than with the 180° timed feed.

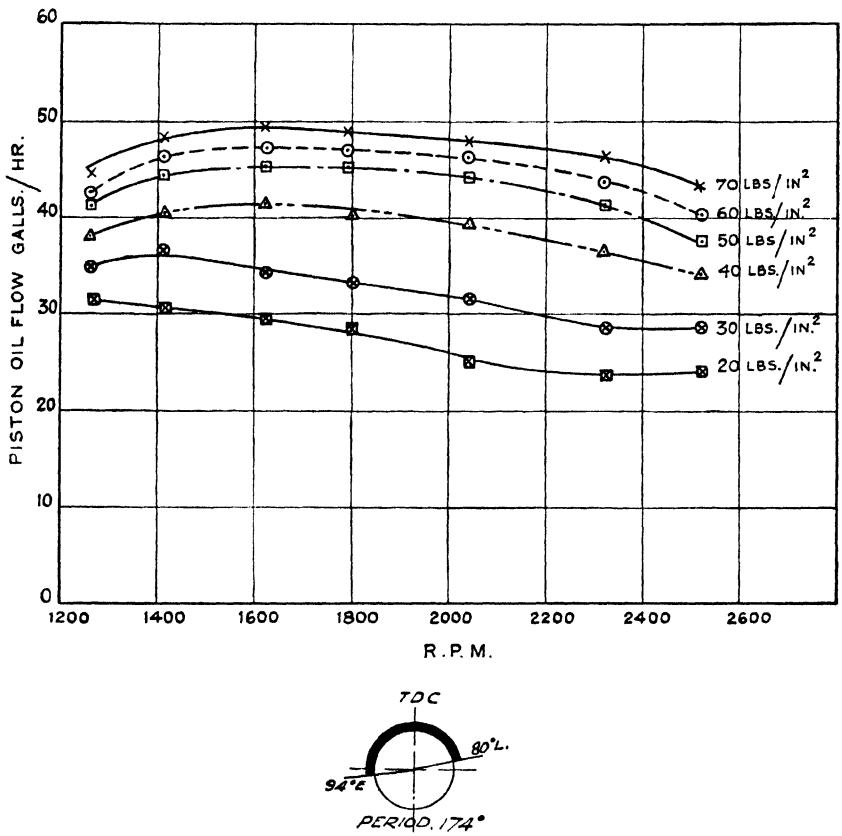

Fig. 14.15.—Piston oil flow over speed range with various oil pressures (E18 engine)

Test conditions:

Three $\frac{1}{8}$-in. diameter holes in top of connecting-rod.
Tubes, $\frac{3}{16}$ in. bore in both connecting-rod and piston-rod.
Spring-loaded collector.
Oil, pale spindle + 1 per cent oleic acid.
Oil temperature, 30° C.

Conclusions. The conclusions to be drawn from these tests and from experience in general appear to be as follows:

(1) There is no difficulty about providing efficient oil-cooling to pistons in light high-speed engines, provided that the conditions are understood and provided for.

(2) The use of the crankpin itself as a rotary valve appears to be far the best method of timing and controlling the delivery of cooling oil to the pistons.

(3) The total amount of heat to be removed by the cooling oil is relatively small, since there is little or no advantage in cooling the piston below a certain well-defined but critical limit.

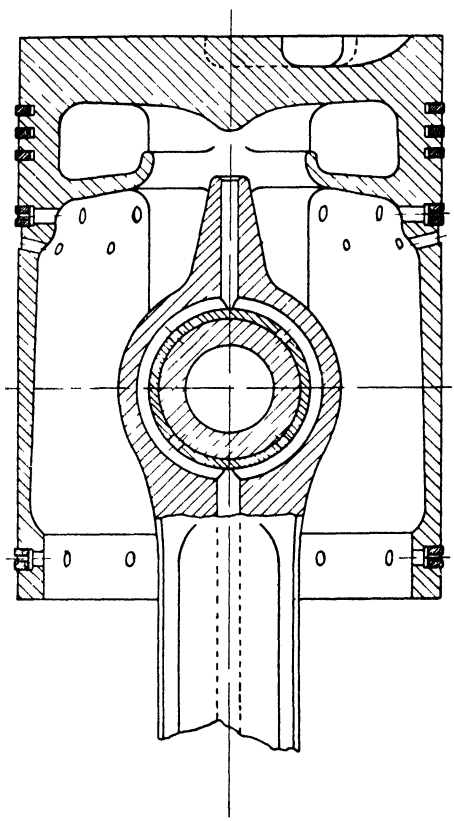

Fig 14.16.—Cocktail-shaker piston

(4) Piston cooling can be effected without robbing the big-end bearing of its quota of cooling oil and without bleeding oil from the highly loaded zones, i.e. the oil used for cooling the piston has already served its purpose of lubricating and cooling the big-end bearing.

(5) The cooling of the piston in this manner is not dependent upon any nicety of adjustment, nor does it involve any additional moving parts.

(6) Control of the quantity of oil circulating through the piston can be determined once and for all by the admission period at the crankpin.

(7) When two connecting-rods are operating on a single crankpin as in the case of a V-type engine, control and distribution as between the two pistons is comparatively simple, provided always that a separate outlet hole in the crankpin is devoted to each connecting-rod, i.e. with two connecting-rods per crankpin, whether of the fork and blade type or side-by-side, there must be two outlet

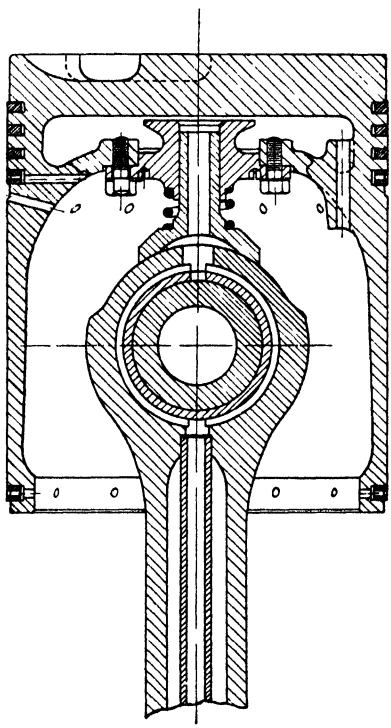

Fig. 14.17.—Oil-cooled piston with spring-loaded collector

oil holes, one to each connecting-rod and each drilled at an appropriate angle, to give to each the desired timing. This involves foresight, but no difficulty.

(8) With more than two connecting-rods per crankpin, the problem admittedly becomes more complex, and its solution must depend on the type of knuckle joint employed.

The composite piston employed in these tests and in the very high-duty two-cycle engines referred to, represents of course an extreme case. When conditions are less severe, a single-piece piston such as that shown in fig. 14.16 (which has come to be known as the patent cocktail-shaker type) will suffice. In this case also the back of the ring grooves and the upper half of the gudgeon-pin bosses are cooled efficiently by

the cocktail-shaker effect, and such a piston appears to be quite adequate for four-cycle engines, even highly supercharged C.I. engines. Other types of oil-cooled pistons which have been developed and are in successful use are shown in figs. 14.17 and 14.18.

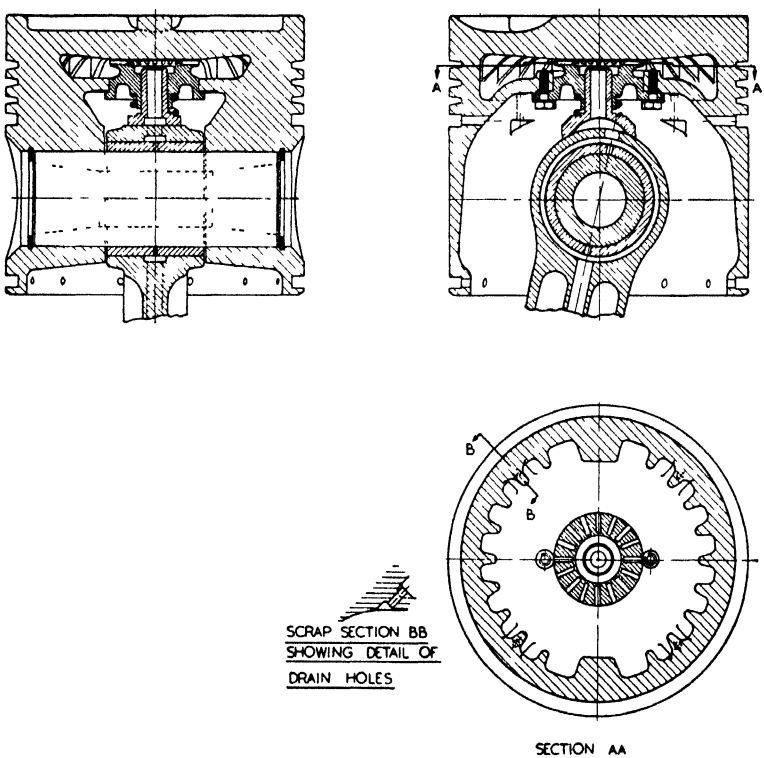

Fig. 14.18.—Alternative design to fig. 14.17

CHAPTER XV

Cylinder Wear

In the normal commercial usage of internal-combustion engines (other than sleeve-valve engines) wear of the cylinder or liner bore is generally the limiting factor and, as such, has formed the subject of a great deal of investigation. It is therefore worth while to devote some space to this problem.

Broadly speaking it can be stated that, *ceteris paribus*, the rate of wear per hour appears to be entirely independent of revolution or piston speed, that is to say, the hourly loss of metal is the same whether the engine be running fast or slow. The amount of wear, however, that can be tolerated is a direct function of the cylinder diameter.

Let us consider the case of two similar engines running under similar conditions as to liner temperature, mean pressure, etc., one of which has a cylinder diameter twice that of the other. The rate of wear in terms of fractions of an inch in unit time will be the same for both, but the larger cylinder can tolerate twice the depth of wear and therefore will last twice as long. On the other hand, it will take at least twice as long and cost at least twice as much to replace the liner or rebore the larger cylinder.

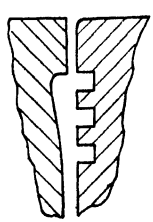

Fig. 15.1.—Typical but exaggerated example of wear in cylinder bore

Causes of Wear

The cause of cylinder wear is in part corrosion, in part abrasion, in part attrition, and it is always somewhat difficult to assess the relative importance of these factors, for the products of corrosion or attrition themselves cause abrasion.

Under all normal circumstances it will be found that the wear is extremely localized and takes the form of a deep groove at the point where the top piston-ring comes to rest at the top of the stroke (see fig. 15.1). The upper edge of this groove is usually quite sharply defined while the lower edge fades gradually away. There are usually indications of a somewhat similar tendency at the bottom of the stroke but of much less magnitude and less clearly defined. Between these limits, and near the middle of the ring travel, the wear is usually only very slight, while below the ring travel it is negligible, thus exonerating the

skirt of the piston from any blame, and the same applies whether the piston material be aluminium alloy or iron.

Careful measurement of the depth of the groove near the top end of the bore will reveal that this varies round the circumference in a quite haphazard manner and bears no uniform relation to the thrust or non-thrust side nor to any other geometrical relationship, nor will it occur in the same place in the several cylinders of a multi-cylinder engine.

Again, as a broad generalization, we can say from experience that so long as the wear measured across the maximum diameter of the worn groove does not exceed about 0·20 per cent of the cylinder bore, no appreciable deterioration of performance will be noticed, provided that the depth of wear is reasonably uniformly distributed around the circumference. When it reaches about 0·25 per cent, oil control will usually become affected, the oil consumption will begin to rise and, in the case of C.I. engines, cold-starting may become troublesome, due to leakage. At about 0·30 per cent, the oil consumption will be getting out of control, accompanied in the case of spark-ignition engines by frequent oiling-up of the sparking-plugs; leakage and blow-by will become noticeable, the piston temperature will rise and may result in the sticking of the piston-rings in their grooves. At about 0·35 to 0·40 per cent, the deterioration in performance will have become very pronounced, the oil consumption out of all control, and the blow-by excessive accompanied by risk of broken piston-rings, if they are still free. In the case of very large slow-running engines in which the lubrication of the pistons is by a metered supply and independent of crank-case splash, oil control is no problem and a somewhat greater proportionate depth of wear can be tolerated; moreover, the leakage path relative to the total cylinder volume is smaller. For example, instances have been reported of large marine Diesel engines operating satisfactorily with a maximum depth of wear of as much as 1 per cent of the cylinder diameter.

In order to appreciate the mechanism of cylinder wear we must consider first the conditions of lubrication that obtain as the piston-ring travels up and down a stationary cylinder, as opposed to a moving sleeve. When in full flight the rings will be completely oil-borne, and the conditions those of full fluid lubrication, but as they approach either end of their travel, and relative motion against the cylinder wall dies down, the conditions will change until, at the point of rest, they will correspond closely with those of boundary lubrication, that is to say, the two surfaces will be separated only by a film of little more than molecular thickness, and there will probably be actual metallic contact between the high spots on each of them. As the piston gets under way again, so the rings will once again ride up on a full fluid oil film, and so on.

For a piston-ring to function at all, it is essential that the gas pressure behind the ring forcing it out against the cylinder walls shall be equal, or at least very nearly equal, to the pressure above the ring; unless this condition is fulfilled the ring will collapse inwards and cease to function as a gas seal at all. In the case of the top piston-ring, this means that the gas pressure behind the ring, and therefore the pressure of the ring against the cylinder wall, must follow closely the pressure in the combustion chamber, and indicator diagrams taken from behind the cylinder-head rings of a sleeve-valve engine, in normal operation, confirm that this is the case. In the case of the second ring, the pressure above the ring is only that represented by the leakage past the first ring, and therefore very much lower, usually little more than one-tenth, while that behind the third gas ring, if there is one, is even less.

As the piston approaches the end of the compression stroke, so the pressure behind the top ring builds up while, at the same time, the lubrication conditions are deteriorating. While at rest the pressure builds up still further until it reaches nearly the maximum. Thus the ring is forced out against the cylinder walls at a very high pressure at a time when it is almost at a standstill and when the lubrication is at its most tenuous; under such conditions some local metallic contact and therefore pick-up is liable to take place. As the piston starts to descend again, the ring, still under a very high and increasing pressure, is torn away accompanied at each cycle by the removal of some metal from both the ring itself and the liner. In normal circumstances the amount of metal thus removed from both surfaces is, of course, extremely minute, and accounts for probably only a very small proportion of the total wear, but if either the gas pressure is exceptionally high, or the surfaces ill-matched, more extensive seizure may occur; the loss of metal may then be considerable and the ring will become scuffed, i.e. the working surface scored and the corners sharpened to a razor-like cutting edge, while debris torn from the surface of the top ring or liner will probably cause somewhat similar scoring of the lower rings and of the lands and skirt of the piston. When the piston has gathered way again, the ring will once more ride up on the oil film and be separated from the wall by a lubricating film of appreciable thickness. At the bottom end of the stroke somewhat the same conditions will apply again, but on a very much reduced scale, since the gas pressure behind the ring is now very much lower.

In order to distinguish it from the other factors, let us call this form of wear "attrition"; unless it becomes acute and develops into ring scuffing it is not a major factor, but it is one which must be taken into account, since it has a bearing on what is usually the major factor, namely, corrosion wear.

Let us consider once again what happens when the ring comes to rest at the end of the compression stroke, but this time from the point

of view of corrosion wear. Owing to the high pressure behind the ring, the protecting oil film is squeezed out to such an extent that actual metallic contact probably occurs on the high spots. As the piston starts to descend, it leaves behind it a narrow band of either completely exposed metal, or of metal protected only by a very inadequate coating of lubricant. The sore place thus left is at once subject to attack by the products of partial combustion, such as formic and other organic acids, while if any large proportion of sulphur be present in the fuel, by sulphur trioxide, which is probably the most virulent of all. Here we must draw a distinction between what happens at the top and bottom ends of the stroke. At the top end the sore place remains exposed to the products of combustion until the piston returns at the end of the next idle stroke, while at the bottom end it is never exposed at all, hence corrosion wear is limited to the top end only. On the next upward stroke of the piston, the products of corrosion are scraped off by the piston-ring, and, in a four-stroke engine, are replaced by a smear of oil by the now unloaded rings which protects the surface during the next two strokes, and so the process is repeated at every cycle.

So long as the exposed surface is above the dew-point of the corrosive products, comparatively little damage will be done, but under the conditions obtaining in the cylinder, the dew-point of some of the products of partial combustion is fairly high.

The third factor is abrasive wear, due to minute particles of grit introduced with either the air or the lubricant, or in some cases with the fuel itself. However meticulous be the filtration, it is quite impossible to eliminate entirely the entry of minute particles of grit, which serve as lapping agents; moreover, there is evidence to show that some of the carbonaceous deposits from the fuel or the lubricant are themselves hard enough to serve as a lapping medium, and the same may, and probably does, apply to the debris of corrosion products scraped away by the piston-ring.

Because these several sources of wear interact upon one another, it is difficult to assess their relative importance, for example, heavy attrition will involve the exposure of a greater area to corrosion, while heavy corrosion will increase the abrasive wear and so on; none the less, we can get some pointers. For example, it is reasonable to expect that either attrition or abrasive wear will involve an approximately equal loss of metal from both the piston-rings and the liner, when both are of the same material, whereas corrosion wear will obviously affect the liner only, for the working surface of the rings is never exposed to this form of attack. When, therefore, we find heavy liner wear but very little ring wear, we can deduce that the bulk of it is due to corrosion. Again, we know that cylinder wear is increased enormously if the cylinder is over-cooled, so that the liner temperature at the critical

zone is below the dew-point of the corrosive products; this can be due only to corrosion, for the cooler the cylinder and therefore the more viscous and the thicker the oil film, the less the tendency to wear by either attrition or abrasion. Yet again, we should expect corrosion and attrition wear to be localized strictly to the narrow band of exposed surface, and not to extend for any considerable distance below this, whereas we would expect abrasive wear to extend more or less throughout the whole length of the ring travel, though it will be at a maximum of course near the top, where the pressures are highest and lubrication at its worst. Yet again the dominance of corrosion wear would explain the observed phenomena that wear is almost independent of revolution speed, for the vulnerable surface remains exposed to corrosive attack for a certain proportion of the total running time regardless of how many strokes the piston makes in that time. Also, it will account for the higher rate of wear usually found in two-cycle engines, for the relative time of exposure is greater.

Some experiments in which a fine stream of abrasive material was admitted to the cylinder along with the air produced a very high rate of wear both of the liner and of the piston-rings but this wear was, in fact, distributed not only throughout the whole of the ring travel but also below it, showing that the piston skirt as well was involved, as indeed would be expected.

Taken by and large, we may conclude that, under normal running conditions, corrosion wear is by far the most important factor, and that it is only under abnormal conditions that either attrition or abrasive wear play any considerable part, though under certain extreme circumstances either or both can have catastrophic results.

Influence of Temperature

Having arrived at this conclusion, the next step is to consider what can be done to prevent or reduce corrosion wear. Little can be hoped of any attempt to reduce the corrosive nature of the products of partial combustion; on the contrary it seems probable that it will grow worse owing to the increasing proportion of sulphur, in the heavier fuels at least.

In the first place we know that corrosion wear increases very rapidly when the temperature of the inner surface of the liner falls below the dew-point of the corrosive products, so that our first aim should be to warm up the top end of the liner as quickly as possible after starting from cold, and to keep it warm, by thermostatic control or otherwise, under all working conditions. In the case of small cylinders, of the order of 4 to 6 in. bore, with cylinder walls or liners of the order of 0·3 in. to 0·4 in. thick, the temperature of the inner surface of the upper end of a really well-cooled liner on full load, in the region where the top piston-ring comes to rest, is usually about 60° C. above that of the

cooling liquid. This is not to say that the temperature gradient through the liner on full load is as steep as this figure would imply, because there is an additional barrier between the outer skin of the liner and the water. To be safely above the dew-point, we require that the inner surface temperature shall be over 120° C. at the point where the top piston-ring comes to rest, which, in turn, implies a minimum water

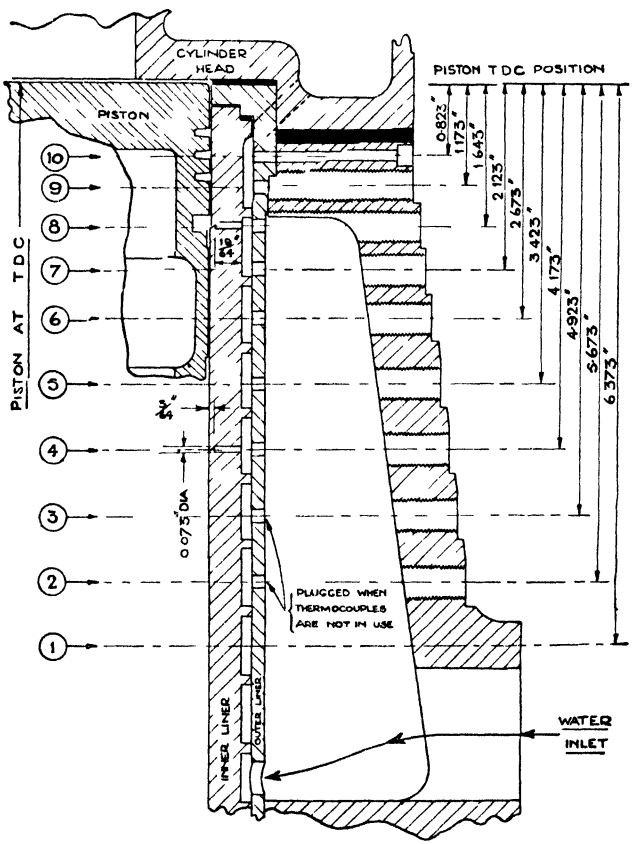

Fig 15 2 —Positions for traversing thermocouples on non-thrust side of E19 engine, bore 4 5 in. × stroke 5 5 in.

temperature of 60° C. on full load and somewhat higher on light load. In practice it means that the temperature of the coolant around the liner should not be allowed to fall below 60° C. for longer than can possibly be helped, and be brought up to this temperature as quickly as possible after every cold-start.

In this connection some investigations carried out in the author's laboratory on behalf of the Air Ministry on a single-cylinder four-cycle petrol engine may be of interest. In these a special traversing thermo-

couple, which had been developed for other purposes, was employed to record the temperature gradient through the walls of the liner itself, while the temperature drop between the outer surface of the liner and the water in its immediate vicinity was recorded at the same time. In order to ensure control of the water velocity along the liner, the normal wet liner was surrounded by a metal sleeve, leaving a water space between sleeve and liner of about 0·15 in.

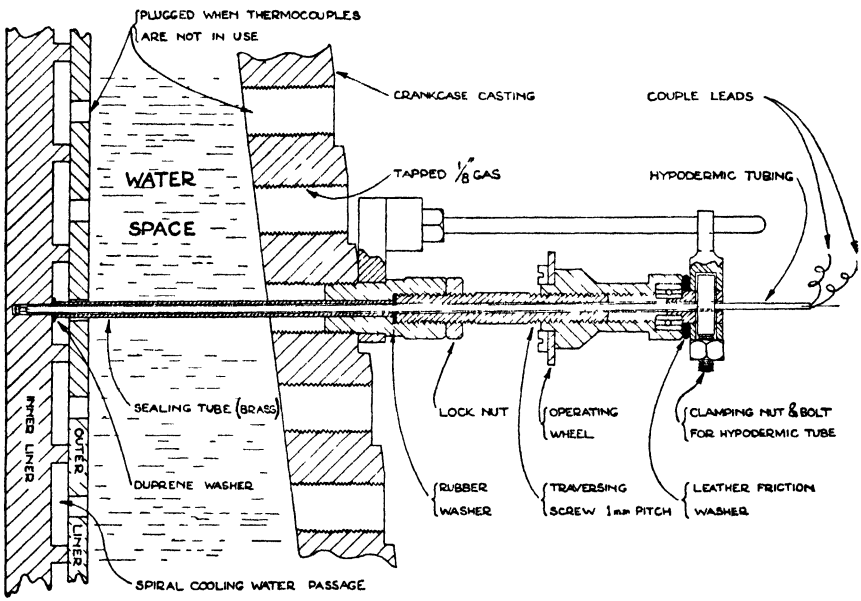

Fig 15 3 —Traversing gear with thermocouple in position (No. 4 couple on non thrust side, cf fig 15 2)

A square-section wire of about 0·15 in. cross-section was wound round and soldered on to the liner in order to form a spiral passage-way of uniform pitch. Cooling water entered the main water space and from there passed up between the sleeve and the liner from end to end of the liner, following the spiral passage-way between them. Since both the area of the spiral passage-way and the rate of flow of the water could be determined accurately, it was possible to know exactly the velocity of flow over every part of the liner surface, while fixed thermocouples inserted into the water passage recorded the temperature of the water at each station along the length of the liner.

A number of small holes, $\frac{1}{16}$ in. in diameter, were drilled in the wall of the liner reaching to within 0·012 in. of the inner surface, and into these the traversing couple was fitted in turn.

Figs. 15.2 and 15.3 show the general layout. For the traversing thermocouple, eight stations were provided along the length of the

liner on both the thrust and non-thrust sides, but unfortunately owing to the cylinder construction the highest station that could be accommodated was a little below the level of the top gas ring at top dead centre.

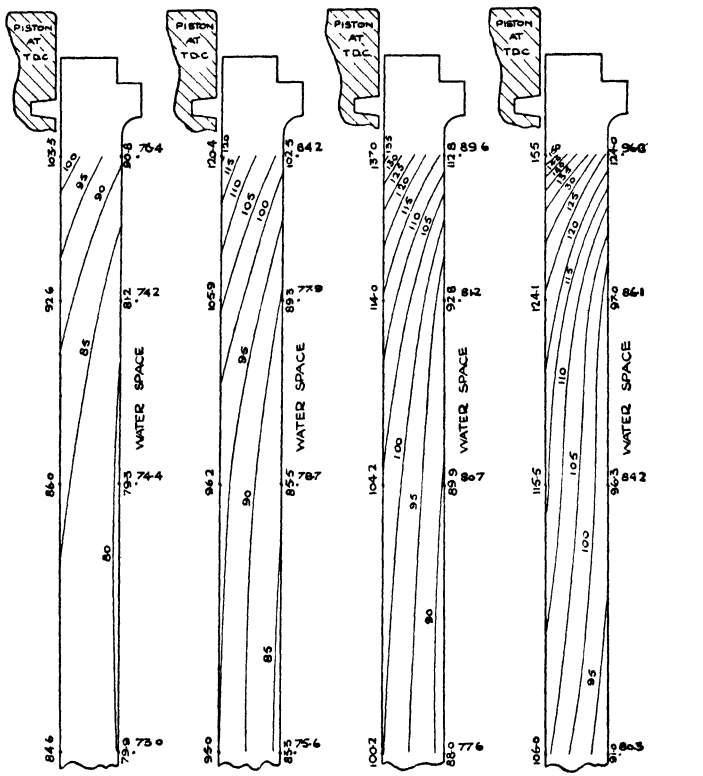

Fig. 15.4.—Isotherms in the cylinder liner at various test conditions with water velocity of 1·1 ft. per sec.

Summary of traversing thermocouple tests on non-thrust side
Thermal conductivity of S79 cylinder liner, 0·105 gm. cal./cm.²/sec./cm./°C.

Once the technique had been mastered, the method proved very reliable and consistent, and repeat tests gave very close agreement. A very large number of readings were taken at various speeds and at brake mean pressures up to 220 lb. per sq. in., with water velocities ranging from 0·5 to 9·5 ft. per second.

Fig. 15.4 shows a typical set of readings plotted in terms of isotherms under four different conditions of speed and load, and with a

constant water velocity of 1·1 ft. per sec. These show the temperature gradient through the liner throughout the length of piston travel and, at the same time, the temperature of the water as measured at each station of the traversing thermocouple.

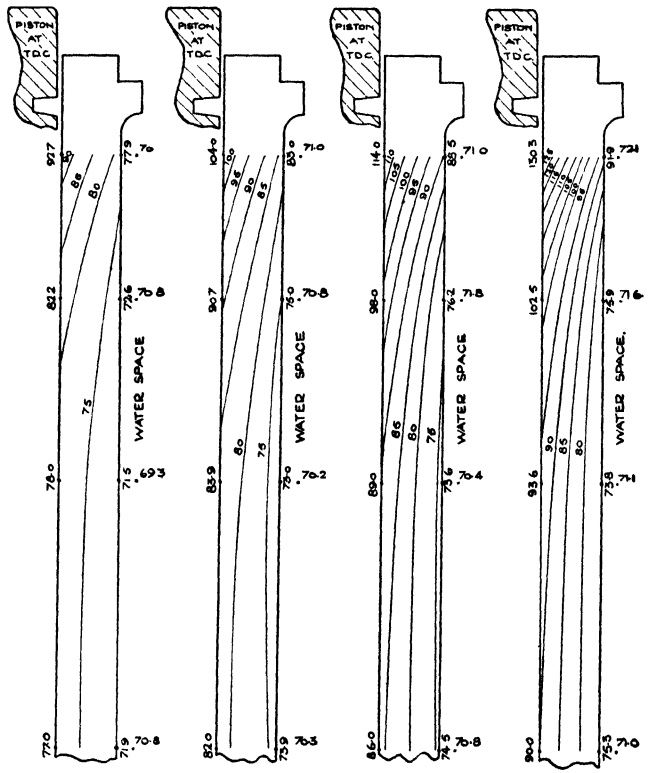

1000 r.p.m. Part throttle B.M.E.P., 79 lb./in.² approx. 11 I.H.P.	1500 r.p.m. Full throttle B.M.E.P., 124 lb./in.² approx. 26 I.H.P.	2000 r.p.m. Full throttle B.M.E.P., 124 lb./in.² approx. 36 I.H.P.	2000 r.p.m. I.P., 15 in. Hg. I.T., 60° C. B.M.E.P., 193 lb./in.² approx. 50 I.H.P.

Fig. 15.5.—Isotherms in the cylinder liner at various test conditions with water velocity of 9·4 ft. per sec.

Summary of traversing thermocouple tests on non-thrust side
Thermal conductivity of S79 cylinder liner, 0·105 gm. cal./cm.²/sec./cm./°C.

Fig. 15.5 shows the results of similar tests at the same speeds and loads but with a water velocity of 9·4 ft. per sec.

From these and many other similar tests it was confirmed that, as would be expected, the heat flow to the liner of a petrol engine was a nearly direct function of its air consumption, and to that of a C.I. engine of the fuel consumption, regardless of whether the output was attained by supercharging or speed.

These tests underlined also the importance of high-velocity water circulation over critical zones where the heat flow is intense as, for example, in parts of the cylinder head.

On the other side of the picture, we must not allow the temperature of the liner to rise too high, or we shall be in trouble not only with excessive attrition and abrasive wear, but also with high piston temperatures, for the piston, unless oil-cooled, must transmit most of its heat via the cylinder walls.

We can help to reduce corrosion wear at each cold-start by injecting into the cylinder a small quantity of lubricating oil to provide an additional protecting film for the first few cycles at least, and since in the case of any C.I. engine this will serve to help cold-starting, it is worth doing in any event.

Though tests for comparative cylinder wear are difficult and laborious, and depend on very carefully controlled temperature and other conditions, yet enough evidence has been collected to suggest that, from the point of view of minimum wear, the optimum temperature for the inside surface of the liner at the point of maximum wear is in the neighbourhood of 140° C. Above this temperature both attrition and abrasion become serious factors. Although we want to keep the temperature of the liner fairly high, this is not to say that we can afford to neglect its thorough and uniform cooling, or we shall run into other and more serious troubles such as distortion of the bore, gummed-up piston-rings, etc. It cannot be emphasized too strongly that control of the liner temperature must be maintained by proper control of the temperature and flow of the coolant and certainly not by incomplete or unsymmetrical cooling.

The Importance of Materials and Surface Finish

Apart from control of the temperature much will depend upon:

(1) Choice of material for the liners and rings.
(2) The nature of the finish.

For most commercial purposes cast iron is generally preferred for the cylinder liner and indeed it has some very important advantages, not the least of which is its porous structure, hence it will retain oil within its pores which, in turn, will be released and ooze out again as soon as the pressure on the surface is relieved, and so serve to wet and protect what would otherwise be left as an exposed surface. The more open the structure of the cast iron, the better from this point of view. The old belief that a close-grained cast iron was required for cylinders or liners dies hard; it is in fact the very last quality we need. Again, another great advantage of cast iron is its relative immunity from attrition, scuffing, or seizure. As a mental picture, the author prefers to regard cast iron somewhat as a metal sponge containing

innumerable cells of free graphite. So soon as any appreciable attrition or scuffing takes place, one or more of these cells is exposed, thus releasing free graphite to serve as an effective lubricant.

Within the author's experience the best cast-iron for cylinder liners appears to be a very high phosphorus iron containing about 1·0 per cent of phosphorus. To what extent the comparative immunity of this material from wear is due to the porosity of its structure or to its resistance to corrosion is uncertain.

Experience with austenitic cast-irons, which should be especially resistant to corrosion, has, on the whole, proved disappointing in that the bearing surface they afford appears to be unsatisfactory, with the result that severe scoring, or even piston seizure, is liable to occur.

When weight becomes a primary consideration, as in the case of aero-engines, we are forced to use steel liners and here we come up against a number of problems such as surface hardness and surface finish.

If we employ a straight carbon steel, heat-treated, but not surface-hardened and with a normal smooth finish, we are up against the difficulty that:

(1) The surface hardness is not sufficient either to resist abrasion or to mate with cast-iron piston-rings, under high ring pressures or temperatures, with the result that serious attrition, scuffing, and even complete piston seizure are liable to occur.

(2) Owing to its lack of porosity, it cannot retain, below the surface, any reserve of lubricant to protect it against corrosion, with the result that both attrition and corrosion wear are severe.

So long as the maximum gas pressures are fairly low, i.e. below about 600–700 lb. per sq. in. and the upper end of the liner well cooled, attrition is not serious but the corrosion wear is much greater than with a normal cast-iron.

Surface hardening by carburizing, or better still by nitriding, serves to protect against attrition and abrasion, but does not help against corrosion wear; this is not, however, the whole story for, when a hard and impervious surface is finished very smooth or allowed to become highly polished, the oil will not wet or spread over it and dry patches or streaks are liable to cause piston seizure. It has become the practice therefore with surface-hardened steel liners to adopt what is generally known as a "satin" finish, that is to say, the bore after grinding is either etched, or lapped with a very coarse hone, in order to break up the surface into innumerable small ditches in which the oil can flow and retreat and so, to some extent, imitate the conditions which obtain with a porous cast-iron. Thus finished, the bore has a dull grey matt appearance and is resistant to all three forms of wear. The belief that a very smooth highly finished surface was desirable has

long since gone by the board. To-day we realize that, in the case of steel liners, this is the last thing to aim at. In the case of cast-iron liners, since the surface is naturally porous and therefore oil-retaining, the nature of the finish is relatively unimportant.

The importance of surface finish came very much to the fore at the time, about 1930, when the use of chromium-plating was advocated. Plated in the conventional manner with hard chromium which was quite impervious, the bore very soon assumed a high polish; on this very hard and polished surface the oil would not spread and frequent piston seizures occurred. This led to the introduction of a somewhat porous deposit of relatively soft chromium which proved far more satisfactory, though even this was liable at times to assume a high polish. As a next step, the chromium deposit, after finish-grinding or honing, was partially stripped by being replaced in the plating bath but with the polarity reversed. The effect of such final stripping was not to alter measurably the dimensions but to leave the surface pock-marked by innumerable small but deep pits to serve as retreats and reservoirs for lubrication. Thus treated, the chromium-plated surface has proved remarkably successful, for it is hard enough to resist abrasion and sufficiently well-protected by the oil to be resistant to corrosion and attrition. If the technique is carried out correctly a cylinder barrel or liner treated in this manner should show only about one-quarter of the rate of wear of a good cast-iron and will, in fact, last so long as to render the use of detachable liners unnecessary. Such a coating is of course very brittle, and for this reason it is not suitable for very thin liners such as those of aero-engines in which there is liable to be some flexure or panting. Again, there is evidence that a porous chrome cylinder or liner should be run rather cooler than an iron or steel liner, presumably because in the case of chromium, either attrition or abrasion or both are more destructive than corrosion wear.

During the early experiments on the single sleeve-valve described elsewhere in this volume, it had been observed that the wear of the sleeve valve both internally and externally was remarkably small. Comparative tests as between a sleeve-valve and a poppet-valve unit of the same dimensions, and in which the sleeve valve of the former and the liner of the latter were of exactly the same cast-iron, showed that the rate of internal wear of the sleeve valve was barely one-tenth that of the stationary liner, while the external wear was negligible. It was noted also that the characteristic contour of the wear was entirely different in that there was no sharply defined groove and the wear, such as it was, was distributed throughout the whole length of the ring travel, though naturally somewhat greater at the upper than at the lower end. It was this observation, many times repeated and confirmed, that gave rise to the theory of corrosion wear as the major factor in poppet-valve engines. That apparently no such wear occurs

in the case of the sleeve valve is probably to be explained by the fact that relative motion between the piston-rings and the sleeve never ceases, hence full fluid lubrication is probably maintained throughout the entire cycle, and no part of the bore is left unprotected by an oil film of sufficient thickness to ensure against either corrosion wear or attrition. In the single sleeve-valve with its combined rotary and reciprocating motion, any given point on the sleeve is moving at a nearly uniform velocity throughout the whole of the cycle and, in a four-stroke engine, is equal to about 25 per cent of the mean piston velocity; thus it would appear that at all normal running speeds and pressures there is, at all times, sufficient relative motion between the sleeve and the piston and its rings to maintain full fluid lubrication. These early observations have been amply confirmed by the behaviour of a substantial number of high-speed sleeve-valve C.I. engines which have been in constant service for twenty years as auxiliary engines on shipboard, in pumping and electric power stations, etc. All these engines are equipped with cast-iron sleeves of the same composition as normally used for cylinder liners. So far as the author has been able to discover, no single instance has yet been recorded of a sleeve valve having to be renewed or reground on account of wear, while many such sleeves have over 60,000 hours of running time to their credit, and still do not show sufficient wear to affect adversely either the oil consumption or the ease of cold-starting.

CHAPTER XVI

Piston Aero-engines

The author does not propose in this volume to discuss the gas-turbine for it is a very large subject; moreover it is one which has been dealt with very fully, and that by many highly competent authorities during recent years. Suffice it to say that the gas-turbine, whether its energy be used to drive an air-screw or as a simple jet, has superseded the piston engine for almost all military aircraft, and will probably do so for a large proportion of civilian service within the next few years. This at least is the present belief in this country where the development of the turbine for aircraft propulsion is already very far advanced and where no further development in high-powered piston engines is contemplated except as the high-pressure element of a compound turbine unit. In America the large piston engine appears still to be in favour and some new types of high-powered piston engines are still being developed actively.

It must be borne in mind that all research and development work on aero-engines in this country during recent years has been carried out either during war itself or under the shadow of gathering war clouds, with the result that military requirements have always dominated, and all the funds available for research and development have had to be devoted to this aspect of the problem.

Military requirements call for the utmost possible power output from the minimum weight or bulk of engine, while such considerations as fuel economy or even safety, both so vital in civil aviation, must take but a second place. To the Service pilot, safety depends first and foremost on his ability to out-manœuvre his enemy, and to this everything else is subordinate. Fuel economy, of course, becomes important where very long range is required, but since the attainment of the utmost possible power output calls for a high thermal efficiency in terms of air consumption, it is always easy, though at some cost in maximum power, to convert it to terms of fuel consumption where required.

From the military aspect in particular, the goal to be aimed at is minimum weight or bulk of engine, and it is here that we, in this country, adopted a policy differing from that of all the other belligerent nations, for we, having always in view the need for very high speeds, concentrated primarily on small bulk, or more particularly on small

frontal area. To this end we devoted our energies to the development of small, but very high-pressure, high-speed engines, while all the other countries concentrated on the relatively large, low-pressure, low-speed type. We gained but little thereby in specific weight, for the smaller engines must be proportionately stiffer to withstand the higher gas pressures and dynamic loadings, but we gained greatly in reduced frontal area. In so doing we chose the more difficult path, but our policy was vindicated amply during the "Battle of Britain" and

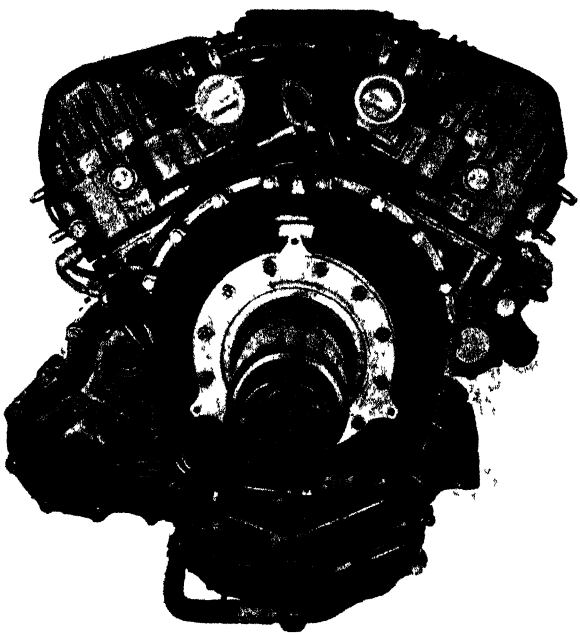

Rolls-Royce photograph

Fig 16.1 —Rolls Royce "Merlin"

subsequently. Broadly speaking, the cubic capacity of the British engines was only about 70 per cent that of others of the same type and power, and the frontal area even less. This we achieved by the employment of much higher mean effective pressures of the order of 350 to 400 lb. per sq. in. in the case of operational types of liquid-cooled engines, and 250 to 280 lb. per sq. in. in that of air-cooled engines, and by employing piston speeds of the order of 3000 ft. per min. and over.

The famous Rolls-Royce "Merlin" engine (figs. 16.1 and 16.2) which powered most of our fighters and many of the American and Russian aircraft also, was perhaps the most outstanding product of this school of thought. Before the end of the war this engine, designed in 1932–33 and of only 27 litres cylinder capacity, had passed a special

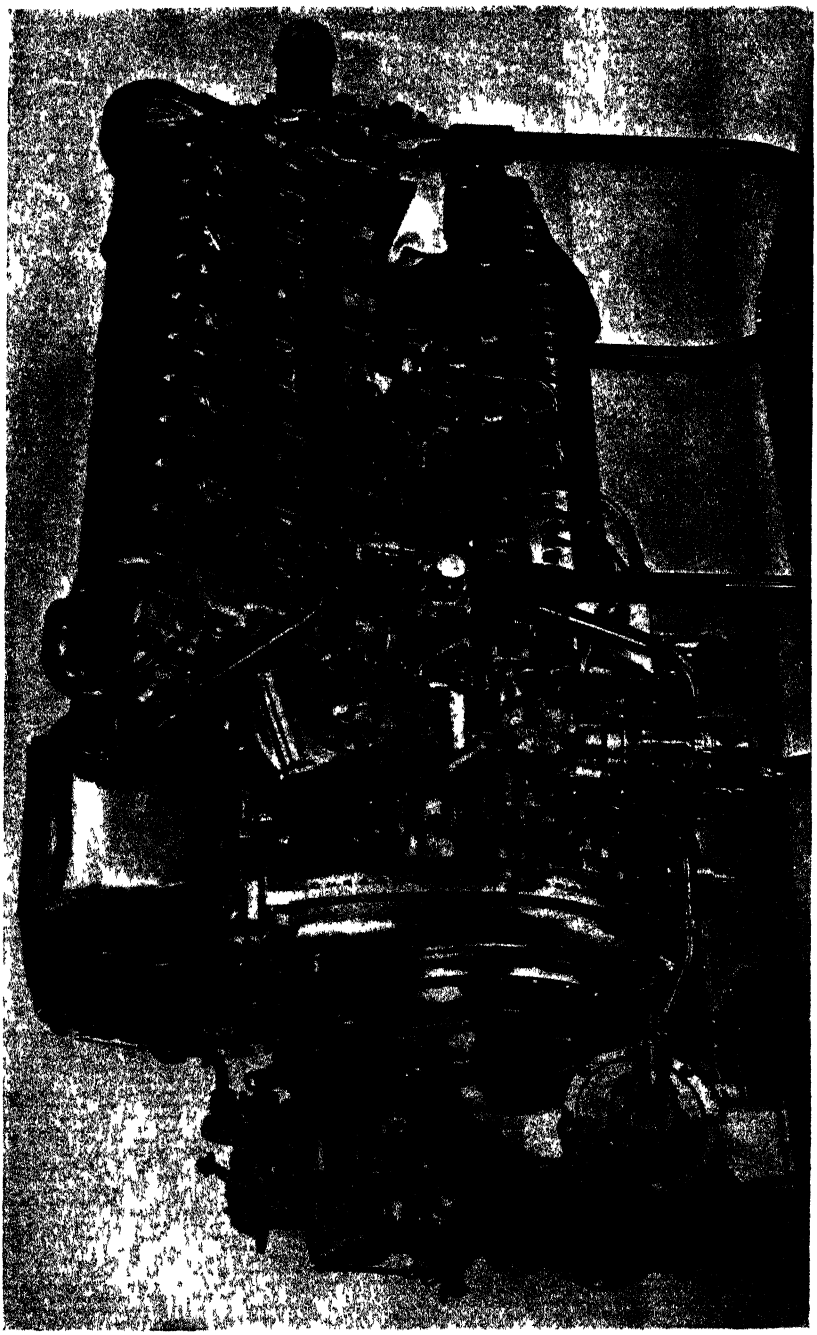

Rolls-Royce photograph

Fig 16 2 —Rolls Royce "Merlin"

type test with a combat power of no less than 2340 B.H.P. at 3000 r.p.m., corresponding to an indicated mean pressure of 475 lb. per sq. in., and an " all out " maximum power of 2620 B.H.P. or very nearly 100 B.H.P. per litre of cylinder capacity.

The modern piston aero-engine, though now shortly to be eclipsed by the turbine, represents probably the finest achievement ever reached in any sphere of mechanical engineering, for it constitutes the best example of what can be accomplished by the intimate co-operation of the scientist and the practical engineer working together in perfect harmony.

In every successful example it will be found that the actual designer of such an engine is neither a great scientist, nor an expert mechanic, but an artist with an artist's temperament and intuitive genius, though none the less ready to appreciate and accept all the aid that the scientist and the practical mechanic can give him, and competent to blend his and their conflicting demands into a perfect picture. Such men are rare and, in any one country, can be counted almost on the fingers of one hand. Without doubt the greatest of them all was the late Sir Henry Royce.

Once a basic design has been evolved, its subsequent development proceeds by progressive steps made possible only by wide experience in usage and by the most meticulous attention to detail and manufacturing technique, but even in so rapidly developing a field as that of aircraft, a sound basic design once established endures with very little apparent change for 15 years or more. None the less its power output during that period is generally increased by from two to three times as improved fuels, improved materials, and manufacturing technique become available; for example fig. 16.3 shows the progressive improvement in maximum power output of the Rolls-Royce " Merlin " engine since 1935.

It would be hard indeed to point to any one feature or discovery which, by itself, has revolutionized the performance of the aero-engine. Progressive improvements in fuel with a view to reducing the tendency to detonate have done more than anything else to render possible the high performance of the modern engine. Since the realization prior to the 1914 war, that the incidence of detonation set a limit, and in those days a very early limit, to the power output obtainable, research on fuels has been carried on intensively, and the engineer has, at every step, taken full advantage of it, at first to raise his compression ratio and thereby gain in thermal efficiency and, when that had reached the practicable limit, to increase further his mean effective pressure by supercharging. An increase from 66 to 100 in octane number permits of almost a threefold increase in mean effective pressure but at the cost of more than doubling both the maximum gas pressures and the intensity of heat flow. Throughout the last thirty years it has been a

neck-and-neck race between the chemist and the engineer; at times the chemist has been ahead, and the engineer at frantic pains to stiffen the structure and working parts and improve the cooling of his engine in order to take full advantage of the improved fuel; at others he has taken the lead. It proved a wise recommendation of some twenty years ago, following research work on the compression-ignition engine, that development tests on aero-engines should be carried out on specially prepared fuels many octane numbers ahead of that which was available in contemporary service; thus they were subjected in ad-

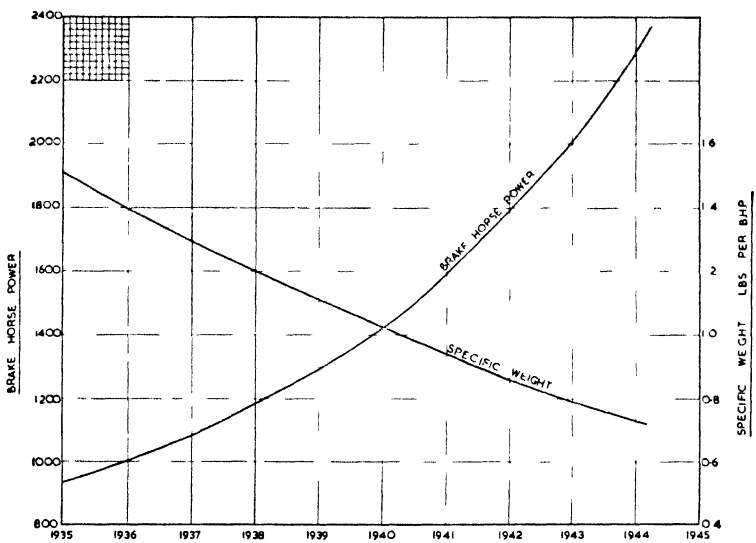

Fig. 16.3.—Curve showing progressive improvement in maximum test-bed horse-power of Rolls-Royce "Merlin" engine over the period 1935–45

vance to pressures and intensities of heat flow comparable to those with which they would have to cope in the not far distant future. As a result of this policy many weaknesses and shortcomings which otherwise would not have been apparent were disclosed and corrected, before any large-scale production had commenced. From a mechanical point of view, progress has taken the form of strengthening step by step each weak link as it gave under the ever-increasing strain. At one time exhaust valves were the limiting factor, but the introduction of sodium cooling and the use of "Stellite", "Brightray" or other similar materials for facing the valves and their seatings, banished this limit. Next came bearings, when the intensity of loading exceeded the capacity of ordinary anti-friction linings, and special materials such as copper-lead, cadmium-nickel, or silver-lead, involving new techniques, had to be substituted. Throughout the whole picture the piston itself

has always been the weakest link; here detail design in the way of better disposal of material, with a view both to stress distribution and heat dissipation, and the use of oil-cooling have done much to improve conditions, but so far as the piston is concerned, the greatest gain of all, in the author's opinion, has been the development, by Napier's, some twenty-five years ago, of the wedge-shaped piston-ring.

The above are but a few of the thousand-and-one steps that have been taken to improve the performance of any given engine. It is probably safe to say that within a period of ten years of intensive development, almost every single stressed part of every aero-engine in service has been revised, not once but many times, and this, more especially in war time, has had to be done by a process of infiltration, in order to interfere as little as possible with maintenance or the flow of production.

Air-cooling versus Liquid-cooling

From the day when the first aeroplane left the ground, controversy has raged as to the relative merits of air- and liquid-cooling. The exponents of the former have asked, logically enough, "What is the sense of introducing an intermediate fluid, with its increased vulnerability and all its associated plumbing troubles, since the waste heat must ultimately be removed by air in any case?" On the other side, it can be argued that since the intensity of heat flow in an internal-combustion engine cylinder is highly localized, only the latent heat of evaporation of a liquid can cope with it satisfactorily; that if sufficient energy is devoted to scooping heat out of the local hot spots by air blast alone, then either the cooling drag will become excessive, or the performance must be derated considerably, as compared with that of a liquid-cooled engine. To-day it has generally been accepted that, where very high speeds are called for, the liquid-cooled engine with its much higher performance rating and lower cooling drag is preferable, despite the objections of vulnerability, plumbing, and freezing; but that for moderate-speed machines, where a relatively large frontal area and cooling drag can be tolerated, air-cooling is to be preferred. As to overall specific weight, there is but little to choose; on the whole the specific weight of the liquid-cooled engine, together with its radiator and cooling liquid is, if anything, the lower.

Sleeve Valves

Unlike any of the other belligerents we, in this country, adopted the sleeve valve for both air- and liquid-cooled engines, the former as exemplified by the range of Bristol engines, "Hercules" (figs. 16.4 and 16.5), "Centaurus" and others, and the latter by the Napier "Sabre" (figs. 16.6 and 16.7), and later the Rolls-Royce "Eagle" engine (figs. 16.8 and 16.9); in fact the Rolls-Royce "Merlin" and

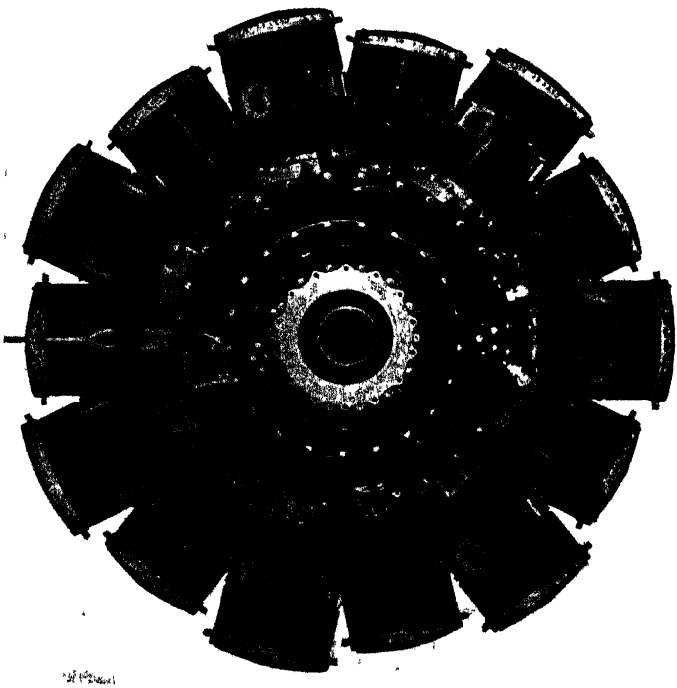

Bristol photograph

Fig. 16.4.—Bristol "Hercules"

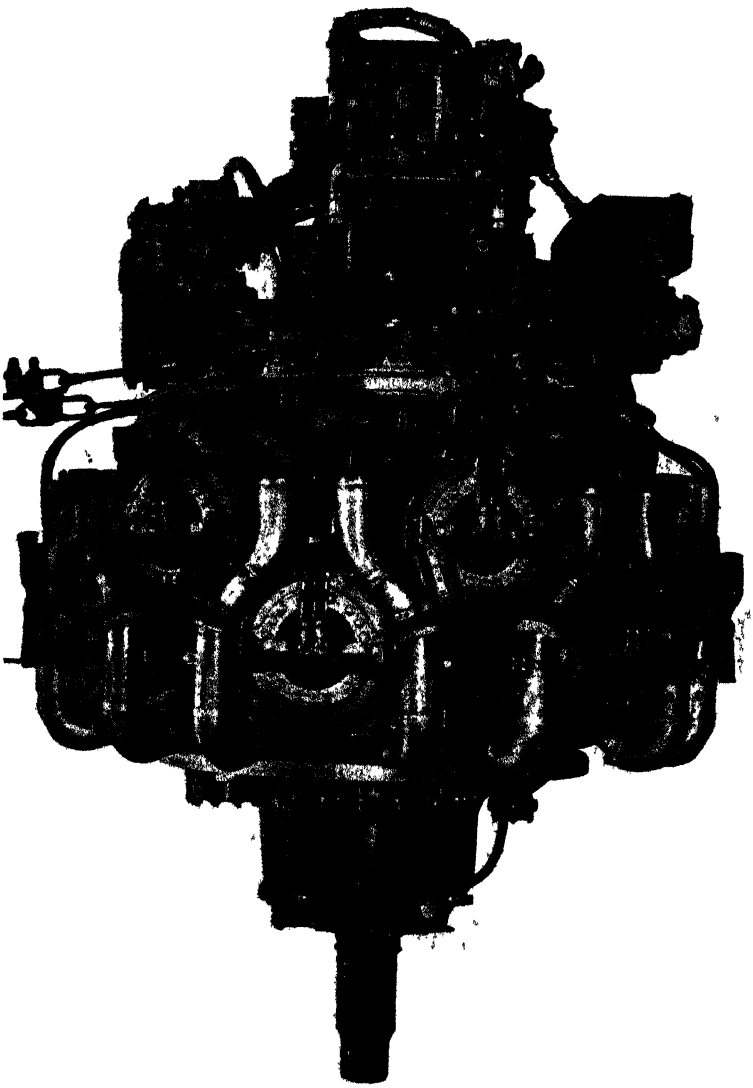

Bristol photograph

Fig 16 5 —Bristol " Hercules "

Fig 16 6 —Napier "Sabre"

Napier photograph

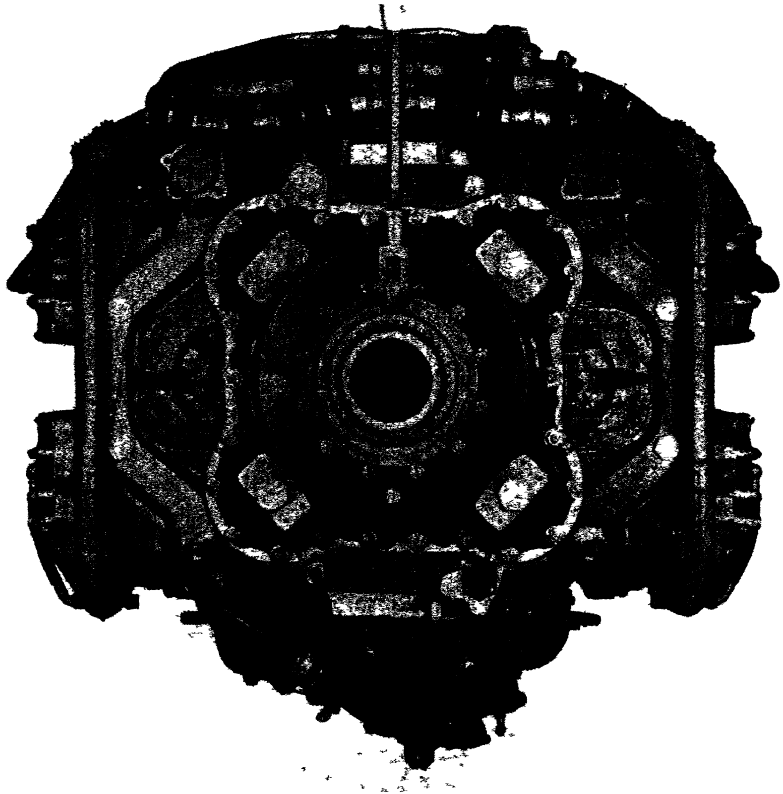

Fig. 16.7.—Napier "Sabre"

Napier photograph

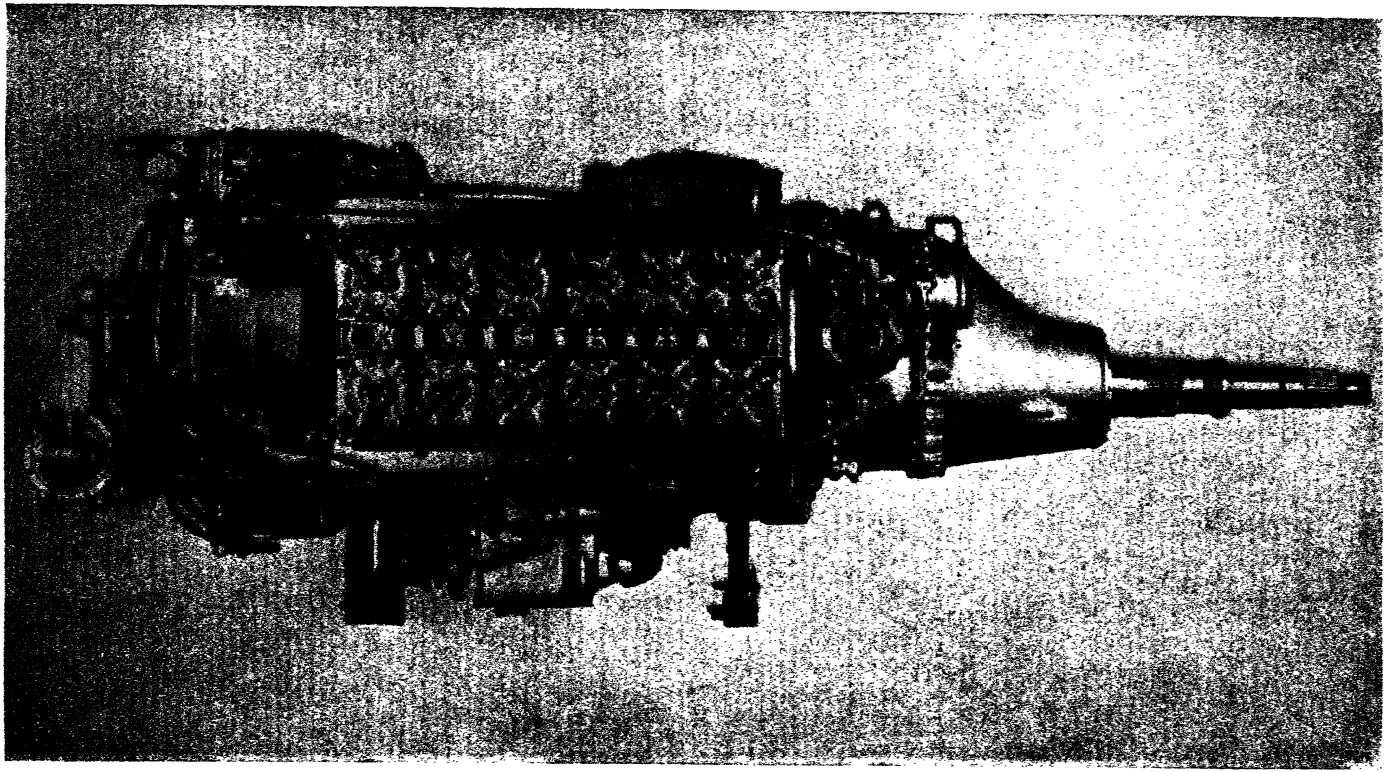

Fig. 16.8.—Rolls-Royce "Eagle"

Rolls-Royce photograph

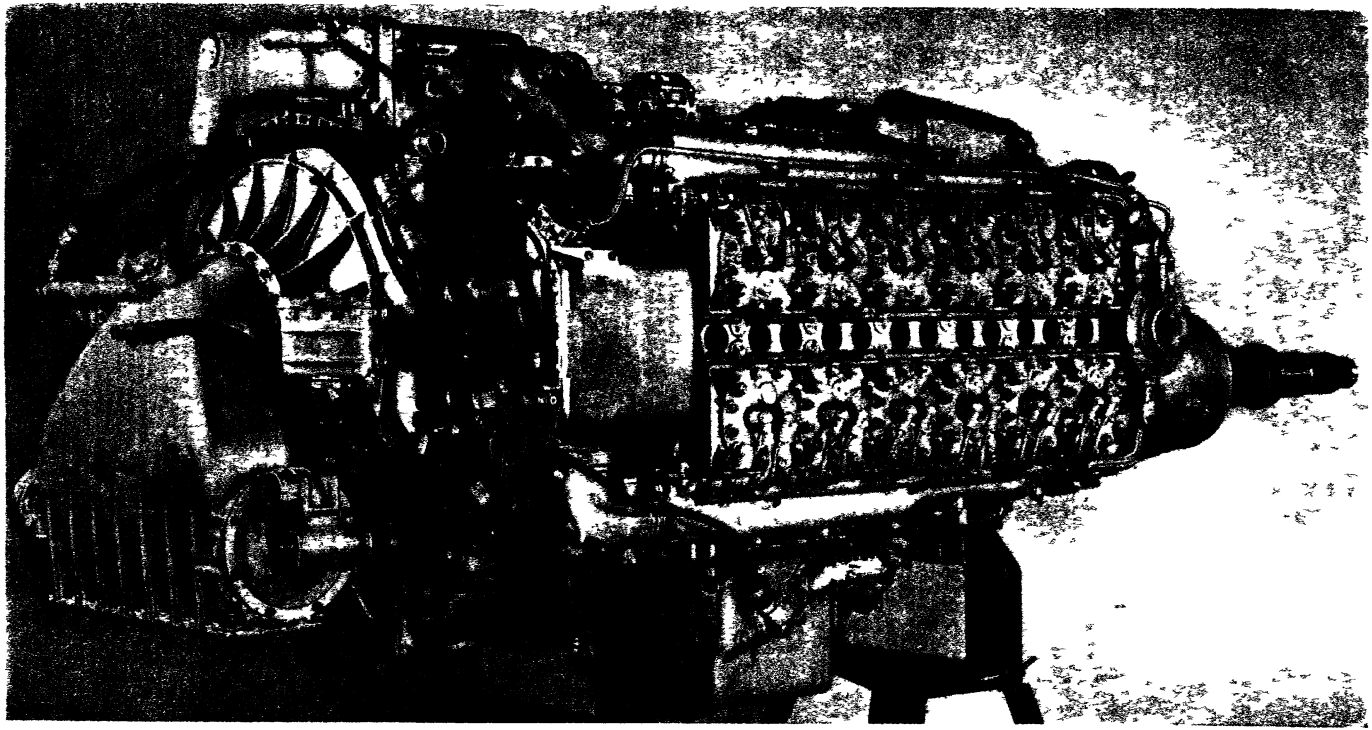

Fig. 16 9 —Rolls Royce "Eagle"

Rolls-Royce photograph

" Griffon " represented about the only surviving poppet-valve engines in military service in this country in 1945. Some thirty years ago when active research on fuels and combustion-chamber forms was in progress, it was realized that the sleeve valve, with its freedom from hot exhaust valves, its immunity from the effects of lead poisoning, and its compact form of combustion chamber with central ignition, would permit of a considerably higher output within the limits set by the incidence of detonation. It would also have the important advantage that with less top-hamper above the piston, frontal area could be reduced substantially. A thorough analysis of the various possible forms of sleeve valve was made and the single sleeve with a combined reciprocating and rotary motion, as patented by Burt and McCollum nearly half a century ago, was considered the most promising. Preliminary tests showed that, on the same octane fuel, a sleeve-valve engine could operate with one ratio higher compression than an otherwise similar poppet-valve engine, or alternatively could cope with a correspondingly higher supercharge; also it could, if necessary, digest a much higher proportion of lead. In those days the octane number of fuels was very low, and lead almost the only means of raising it appreciably, so that the advantage gained was very material. Further the sleeve valve was shown to have a number of secondary advantages, which have been discussed in the chapters relating to sleeve-valve development.

The first complete sleeve-valve aero-engine to be put into service was the Bristol " Perseus ", a single-row, air-cooled radial. After the usual teething troubles, this gave a very good performance and was succeeded by a range of double-row radial engines, the " Taurus ", " Hercules ", and " Centaurus ". The author had felt always that the sleeve valve would show to better advantage in a liquid-cooled engine owing to the difficulty, with air-cooling, of scooping out the heat from the deeply re-entrant cylinder heads. The Bristol Aeroplane Co., however, went a long way towards solving this difficult problem by the development of a two-part head using copper conducting fins (see fig. 16.10).

Next in the field were the Napier Co. with the " Sabre ", a 24-cylinder liquid-cooled engine designed by Major F. B. Halford to take full advantage of the sleeve valve in the direction of extreme compactness. This engine powered the " Typhoon ", " Tempest ", and " Fury " aircraft, the latter having a speed of well over 480 m.p.h. at 20,000 ft. It gave a take-off and combat power of no less than 3050 B.H.P. when running at 3850 r.p.m. and had shown itself capable of a sustained output of 3600 H.P.

Lastly, mention should be made of the 3500 H.P. Rolls-Royce " Eagle ", an engine of generally similar design but of somewhat larger dimensions than the " Sabre ".

Although the sleeve-valve aero-engine came into large-scale production only during the late war, yet during the years 1939–45 over 200,000,000 H.P. of high-powered sleeve-valve aero-engines were produced in great Britain.

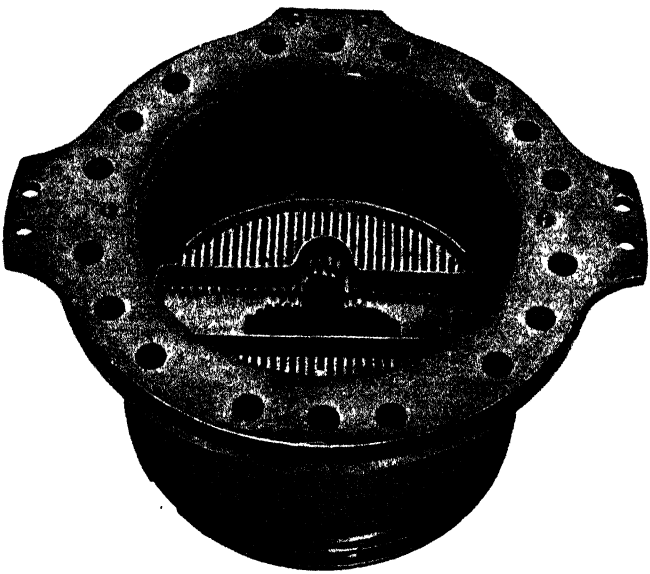

Fig 16.10.—Two-part cylinder head using copper conducting fins

Geometrical Arrangement of Cylinders

For aero-engines of large power, two geometrical arrangements had become almost standardized throughout the world for the last thirty years, namely, the radial cylinder layout for air-cooled engines with one or more rows of cylinders, and, for liquid-cooling, the 12-cylinder V-type engine either upright or inverted. At first glance it would appear that the former, with its very short crankshaft and compact crank chamber, should afford the lightest possible construction; in practice it has always proved disappointing—it remains the lightest in terms of lb. per unit of cylinder volume but not per H.P. since the limitations imposed, on the one hand by air-cooling, and on the other by the concentrated loading on the crankpins, have compelled such engines to operate at lower pressures.

The British policy of concentrating on high pressures and high speeds favoured the use of large numbers of small cylinders and resulted in the development of the so-called H-type engine—in effect two

superimposed 12-cylinder horizontal engines sharing a common crankcase. This arrangement, when combined with the use of sleeve valves, provides a remarkably compact and rigid form, with a very small frontal area, e.g. the Napier "Sabre" and Rolls-Royce "Eagle" engines. Fig. 16.11 shows a front section of the "Sabre" engine.

Compression-ignition Engines

Very shortly after the 1914–18 war the Air Ministry instigated a research into the possibilities, for aircraft propulsion, of the compression-ignition engine using heavy oil, and by 1921 the Royal Aircraft Establishment had converted their largest single-cylinder aero-engine unit and succeeded in reaching a power output at a piston speed of 2400 ft. per min. closely comparable with that of contemporary aero-engines, and that with a fuel consumption as low as or lower than that of large stationary or marine Diesel engines of that date. This really remarkable achievement never received the appreciation or publicity it deserved, for it demonstrated, for the first time, that a compression-ignition engine could both be built with light scantlings and operate very efficiently at a piston speed far in advance of anything that had been achieved hitherto.

It served, however, to inspire and encourage others to pursue the same aim, and by about 1928 research and development work had reached the stage when several full-sized experimental aero-engines, both air-cooled radial and liquid-cooled V-design, with both sleeve valves and poppet valves, were designed and built. At that time the performance of contemporary petrol engines was still limited severely by the low octane number of the available fuel, and the heavy-oil compression-ignition engines looked like being closely competitive even on the basis of specific weight, and were, of course, immeasurably superior on the score of fuel economy, but by the time these engines were completed and had been nursed through their teething troubles, the octane number of petrol had so much improved, and with it the performance of the petrol engine, that much of the advantage had disappeared. There followed, for the next five years, a neck-and-neck race, with improvements in the performance of the compression-ignition engine just about keeping pace with those of the petrol engine and its fuel.

During the later 1930s, however, the rate of increase, actual or potential, of the octane number of petrol steepened, with the result that the performance of the petrol engine gained a lead such as the compression-ignition engine could not reasonably hope to catch up with; for it must be remembered that, unlike the petrol engine, the compression-ignition engine, with its immunity from detonation, had little to gain from any improvement in its fuel. With this situation in view, and with the war clouds gathering ever closer, further develop-

ment of the compression-ignition engine for aircraft was either abandoned or relegated to a low priority. The same sequence of events occurred in other countries, notably in America, where the Packard Co. had developed and gone into small-scale production of a very neat air-cooled radial, and in Germany where the Junkers Co. had devoted a great deal of energy to the development and relatively large-scale production of the opposed-piston two-cycle version.

Fuel Injection

The early work carried out on the four-cycle compression-ignition engine, though abortive so far as aircraft were concerned, proved extremely valuable in other fields, for it stimulated greatly the development of the light high-speed compression-ignition engine for road transport and other such services. At the same time the higher gas pressures involved served to show up and focus attention upon weak links in the mechanical design of the petrol aeroplane engine, and thus allowed of these weaknesses being corrected by the time that improved fuels subjected them to as high and even higher pressures. Again, the technique of fuel injection, upon which the success of the compression-ignition engine depends, was evolved and perfected during the early phases of the development of the high-speed C.I. engine and was applied by the Germans to their petrol-engined aircraft.

Here again controversy has raged as to the relative merits of fuel injection, metered individually to each cylinder, and the alternative of carburation.

Fuel injection confers certain advantages, e.g. a more accurate distribution of the fuel as between the several cylinders and, almost equally important, an accurate apportionment of lead, thus ensuring a lower overall fuel consumption and less liability to excessive lead deposits in one or more cylinders. It has the further advantage that, since air only is supplied by the supercharger, it becomes possible, by wide valve overlap, to scavenge the cylinders and thus obtain an increase in power output of the order of 10 per cent. Against these advantages must be offset the fact that the admission of fuel to, and evaporation of fuel in, the supercharger improves its performance—a very important consideration when, as in British practice, very high ratios of supercharge are employed. Again, with an externally carburetted mixture, it becomes possible to resort, when desired, to the use of very rich fuel/air ratios, and thereby gain a substantial increase in power for take-off or combat use, due in part to the additional internal cooling, and in part to the fact that all modern high-octane fuels show to best advantage as regards detonation when used very rich. It would seem, therefore, that on balance the externally carburetted system is preferable for military usage where the highest possible power output is required, even at the cost of a slight increase

in fuel consumption, but that for civil aviation the balance of advantage would appear to be with fuel injection.

Temporary Augmentation of Power

In military usage more especially, it is very desirable to be able, for short periods, to augment the power of the engine for take-off or for combat. At take-off and at relatively low altitudes the supercharger can always provide the engine with more oxygen than it can safely consume, within the limits set either by detonation or by thermal considerations, or both. Under such conditions a temporary increase of power can be obtained by the injection of water or of a water-methanol mixture. In this case the high latent heat of the injected liquid serves to provide internal cooling both to the supercharger and to the engine cylinders, while the steam produced serves as a very effective anti-detonant. By such simple means it is possible to augment the power by about 20 per cent without increasing either the heat stresses or the maximum peak pressures.

The addition of methanol, although its latent heat is lower than that of water, confers certain advantages:

(1) It serves as an anti-freeze.

(2) Its boiling-point is much lower than that of water, hence it will evaporate more readily and therefore earlier in the cycle.

(3) It is itself a fuel, and to this extent is convenient in that its admission has the effect of enriching automatically the mixture strength. This latter advantage is often claimed as important, though in fact it is merely one of convenience, for additional fuel can always be provided via the carburettor or injection pump.

Apart from the question of freezing, the proportion of methanol to water should be governed by the compression ratio of the supercharger and therefore the temperature rise. If the temperature rise be low it will not be sufficient to evaporate any large proportion of the water admitted in the supercharger itself, and much may remain in liquid form even after its admission to the cylinder, when its latent heat can no longer serve any useful purpose. In such a case the addition of a considerable proportion, up to 50 per cent, of methanol will be advantageous. On the other hand, if the temperature rise through the supercharger is high enough to ensure evaporation of the bulk of the water before admission to the cylinder, or rather before the inlet valve of the cylinder closes, then the addition of methanol will confer little or no advantage at all.

At high altitudes where, even with the supercharger all out, the engine is still starved for lack of oxygen, temporary power augmentation can be achieved only by supplying additional oxygen in some form or other. In the first attempts liquid oxygen was injected into the eye

of the supercharger; this achieved the desired result and was used in operational service, but was open to the objections that the use of liquid oxygen involved difficult supply problems; that owing to the increased flame temperature and greatly increased tendency to detonate, it could safely be used only at altitudes well above the rated altitude, and lastly, that freezing difficulties tended to introduce a serious time lag in its introduction. Later nitrous oxide was used in preference to liquid oxygen, for this could be stored and carried as a liquid, in light cylinders, at normal temperatures and under quite moderate pressure. Nitrous oxide was found to have very great advantages, not the least of which was that, to the surprise of everyone, it proved to be a very effective anti-knock or, to be more exact, it permitted of a large increase in power, at least 40 per cent, without any increase in detonation, and so could be used safely even below the rated altitude. By the use of nitrous oxide at high altitudes, it was found possible to augment the power by as much as 40 to 50 per cent at a consumption of slightly under 5 lb. of nitrous oxide per additional 100 H.P. per min. Since the time during which such power augmentation was required was generally only a matter of seconds, i.e. in order to close with, or break away from, the enemy, this relatively high consumption was not a serious objection.

The large power augmentation obtained by the use of nitrous oxide was due to:

(1) The liberation of free oxygen.

(2) The liberation of a large amount of heat by its dissociation into oxygen and nitrogen.

(3) The high latent heat of the liquid, the whole of which was evaporated within the supercharger, thus lowering the temperature and increasing the density of the normal supercharge and adding thereby to the supply of atmospheric oxygen.

The Exhaust Turbine

The question of exhaust utilization by compounding with a low-pressure turbine has, of course, been under careful investigation ever since the 1914–18 war.

The thermal efficiency of any internal-combustion engine depends first and foremost on the ratio of expansion, not compression, we can provide. On the face of it, then, it seems absurd to carry out the compression in two or even three or more stages, and the expansion in only one, and that one equal only to the last stage of compression. If the first stages of compression can advantageously be carried out in a rotary blower of the axial or centrifugal type, why should not the later stages of expansion be carried out in much the same manner in an impulse or reaction turbine, and thus convert a portion at least of the

very large potential heat energy available in the exhaust into useful work? Whether the power thus gained be employed to drive the supercharger or be geared back to the crankshaft is irrelevant, at least so far as the general argument is concerned.

Unfortunately the four-cycle spark-ignition engine, as distinct from the compression-ignition, is peculiarly ill-adapted to compounding in such a manner because:

(1) The exhaust temperature is too high and the mass flow too small for efficient use in a turbine.

(2) The exhaust pressure is too low and the mass flow too great for efficient use in a second-stage piston engine.

(3) The four-cycle spark-ignition engine objects strongly to any exhaust back pressure; not only does this involve negative work throughout the whole of the exhaust stroke, and a general raising of the cylinder, exhaust valve, and piston temperatures which we can ill afford, but the additional weight of hot residual exhaust gases left in the clearance volume, accentuates greatly the tendency to both pre-ignition and detonation.

In the four-cycle spark-ignition engine using an externally carburetted mixture, it is not feasible, in practice, to work with a mixture ratio weaker than about 16 : 1. With such a mixture ratio the exhaust temperature after expansion down to that available at the turbine is still well over 1000° C., and in a highly supercharged engine may be considerably higher, for the supercharger will both have raised the initial cycle temperature and, at the same time, the relative heat losses during combustion and expansion will have been reduced, due to the greater density, thus raising further the temperature of the exhaust. No turbine yet made can cope with such high temperatures. Again, in a four-cycle engine the total mass flow of air is limited to that which the cylinder volume defines, and since the whole of it has been carburetted externally, we cannot water down the exhaust temperature with any excess air. We have therefore to fall back on the very wasteful expedient of dissipating, between the engine and the turbine, enough heat to render the temperature acceptable to the latter. If petrol injection, metered individually to each cylinder, be employed, then we can afford to water down the exhaust temperature to a small extent by spilling some uncarburetted air directly into the exhaust, always provided, of course, that the intake pressure is higher than the exhaust. The extent, however, to which we can do this is small, and in the case of a throttle-controlled petrol engine, it would introduce some troublesome control problems, more especially when the engine is throttled down.

To some extent the exhaust back pressure problem can be alleviated, and the overall efficiency improved, by making use of the kinetic

energy from each individual exhaust discharge, but to do this, to the full extent, involves leading separate exhaust pipes from each cylinder to the turbine. To a limited extent it can be done by leading one exhaust pipe from each group of three cylinders with equal firing intervals, but in the case of multi-cylinder aero-engines, the resulting plumbing complexities and the obvious objections to such a multiplicity of red-hot exhaust pipes would render it out of the question. In spite of these objections exhaust turbines are being used in conjunction with four-cycle aero-engines and have been used ever since they were first developed, both by the Royal Aircraft Establishment in England and by Rateau in France during the 1914–18 war, but that they have made relatively so little progress during more than 30 years of development is eloquent of the difficulties involved.

In the case of machines intended normally to fly at very high altitudes, and therefore in a very cold and attenuated atmosphere, there would appear to be strong arguments in favour of the use of an exhaust turbine driven blower in series with the normal mechanically driven supercharger, for, under these conditions, the engine will still be operating at an output well below that for which it was designed and can therefore face some increase in heat flow and exhaust back pressure, while the very low ambient temperature will favour both the engine and the turbine.

Whether the turbine be coupled direct to the supercharger or geared back to the engine crankshaft is somewhat irrelevant; the main point is whether the net overall efficiency is increased sufficiently to justify the additional weight, space, complication, and control problems that an exhaust turbine involves. In the author's opinion, it can be justified only in the case of relatively slow-speed aircraft operating at high altitude, i.e. very long-range bombers, or some types of patrol and reconnaissance aircraft. In most other cases it would seem that the more appropriate use of the exhaust energy from a four-cycle petrol engine is by way of plain jet propulsion by means of backward-facing exhaust nozzles, for this involves no additional ironmongery and, in a very high-speed machine, makes nearly as effective use of the exhaust energy as could a turbine. Some very optimistic figures have, from time to time, been published showing the large gain in economy to be derived by compounding a four-cycle petrol engine with an exhaust turbine, but such figures appear to ignore the deleterious effects of back pressure on the piston engine.

All the above arguments relate, of course, only to the four-cycle spark-ignition engine which is virtually the only type of piston engine in use in aircraft to-day, but since it is by no means the only possible type, it may be worth while to consider the case for compounding other forms of piston engine.

During the second world war, active development of the two-

stroke sleeve-valve petrol-injection engine was in progress and had reached the stage when, after many thousands of hours of single-cylinder development, several complete twelve-cylinder aero-engines had actually been built and tested with very promising results, and but for the advent of the gas turbine, would probably have found their way into production and service.

In the case of such engines, which will be dealt with in more detail in another chapter, compounding with an exhaust turbine shows to much greater advantage, for:

(*a*) Owing to the excess air needed for efficient scavenging, the mass flow of air is much greater than the cylinder volume defines, normally about 50 per cent greater, hence the overall air/fuel ratio at full power is about 24 : 1, and the final exhaust temperature about 700°–750° C. Thus at any given power output of the piston engine, the mass flow at the turbine from the two-stroke is both 50 per cent greater than from the four-stroke, and that at a temperature which is at least more congenial to the turbine. Moreover, the proportion of excess air spilt through the cylinders can be increased at will without interfering with the control of the engine.

(*b*) Since the whole of the exhaust process takes place while the piston is hovering around the bottom centre, exhaust back pressure does not involve any negative work on the piston, nor need it affect the relative proportion of residual exhaust gas, indeed the imposition of exhaust back pressure is the normal method of supercharging a two-stroke engine, with or without a turbine. In consequence of both the greater mass flow and the much higher pressure that can be employed at the turbine entry, the power output of the latter is very much greater than from the exhaust turbine of a four-cycle petrol engine, nor does the turbine react unfavourably in any way on the functioning of the engine.

As applied to a four-stroke C.I. engine, the use of an exhaust turbine has been for many years almost standard practice in marine, stationary, and locomotive service.

In this case, owing both to the much greater ratio of expansion in the engine cylinders and to the excess air at all times available, the exhaust temperature at full power is usually well below 700° C.

Again, although in any type of four-stroke engine exhaust back pressure involves negative work on the piston, the C.I. engine, unlike the petrol engine, is not susceptible to pre-ignition or detonation, and its clearance volume is, of course, much smaller.

Many years of experience with exhaust turbo-blowers on Diesel engines has shown that, on the score of durability, the temperature of the exhaust at the turbine must be kept below 600° C. and, to this end, a little additional dilution air is added to the exhaust either by

excessive valve overlap and scavenging through the cylinder, or by direct short-circuiting between the inlet and exhaust.

If compounding is to be applied to aircraft engines, it would seem that the logical conclusion is to go the whole hog and make the much lighter turbine element an equal or dominant partner. If we decide to do this then the piston engine element can assume a very simple form. We shall have to use a considerable quantity of excess air in order to bring the temperature down to that acceptable to the turbine, and since we must have excess air in any case, we may as well employ compression ignition and thus gain the great advantage both of freedom from detonation or pre-ignition and of being able to control the output throughout the whole range, on the admission of fuel alone. Again, since we must have excess air in any case, we can employ a two-stroke engine, and a very simple form of two-stroke engine at that, for we need not worry overmuch about scavenging efficiency. In effect the piston engine then becomes the combustion chamber of a gas-turbine, but an active rather than a passive combustion chamber, and its size is determined solely by the amount of fuel it can digest per cubic inch of cylinder capacity. Whether we elect to take the power from the engine or the turbine shaft, or part from each, is a matter of expediency. If the whole of the piston engine's output is devoted to driving the blower, and the whole of the power take-off is from the turbine, then the system becomes what, for want of a better name, is generally termed a "gas generator". There is no need, however, to go to such an extreme, which involves very high pressures in the piston engine, and it would seem preferable to share the blower work between the piston engine and the turbine, and to take power from each, which can easily be done as, for example, when using contra-rotating air-screws. Such a compound system holds promise of efficiencies far beyond that attainable by either a straight turbine or a simple piston engine and that without subjecting the turbine to any uncomfortably high temperatures.

CHAPTER XVII

Sleeve-valve Engines

The moving sleeve as an alternative to the more conventional poppet-valve mechanism made its first appearance during the first decade of this century. In those days poppet-valve mechanisms were extremely noisy, and the advent of the sleeve valve represented a vast stride in the direction of noise reduction.

First in the field was the double reciprocating sleeve patented by Knight and developed in this country by the Daimler Co. This was followed by a host of other sleeve-valve designs of which that patented by Burt and McCollum is to-day the sole survivor.

In the Knight engine, two concentric reciprocating sleeves were used, operated from a secondary crankshaft or layshaft running at half the main crankshaft speed and driven from it by a silent chain.

This mechanism served very well so long as the user was content with a relatively low power output; it was adapted admirably for the more luxurious types of pleasure car, where silence and comfort were preferred to high performance. When, however, attempts were made to operate the double-sleeve engine at a high power output, trouble invariably arose due to the partial breakdown of the oil film between the two sleeves and between the outer sleeve and the cylinder bore. Owing to the purely reciprocating motion there was nothing to spread the oil circumferentially round the sleeves, and the lubrication was in consequence streaky, with a tendency to " pick-up " between the oily streaks. So far as possible, spreading of the oil film was encouraged by profuse perforation and grooving of the outer sleeve; by such means satisfactory operation was secured so long as the duty was light, but when subjected to heavy duty, the trouble recurred, and could be warded off only by supplying to the sleeves an excessive quantity of oil. It is true that a number of moderately successful racing-cars were developed early in the century with double sleeve-valve engines, but their success, and indeed their survival, was made possible only by profuse lubrication on a scale that could not normally be tolerated.

In the Burt–McCollum design, as applied to the early Argyll cars, only a single sleeve was used, with a combined rotary and reciprocating motion. This cured completely the lubrication problem, for indeed no more ideal motion could be found for the spreading and mechanical distribution of the oil between two rubbing surfaces. The Argyll cars

fitted with this engine had, for a time, a considerable measure of success, but unfortunately, for reasons quite unconnected with technical performance, the company did not prosper. Early in 1914 the Argyll Company submitted a prototype six-cylinder, single sleeve-valve engine as a competitor in the War Office trials of aero-engines. The engine put up a first-rate performance, but unfortunately broke its crankshaft before the completion of the trials, and was therefore disqualified.

Meanwhile the designers of poppet-valve engines, stimulated by competition with the sleeve-valve types, had taken steps to silence their valve mechanism and had been so successful that by 1914 the sleeve valve had lost much of its advantage in this respect. Also, with the steady and progressive increase in the power output of petrol engines, the weakness of the double sleeve-valve was becoming daily more pronounced, while the single sleeve had been dogged by ill luck.

Arising out of a research on fuels and combustion-chamber design carried out during and immediately after the 1914–18 war, the author became much impressed by the possibilities of the single sleeve-valve for high powers, and more especially for high-powered aero-engines. At that time the octane number of the fuels available was very low, and the incidence of detonation was the one factor which limited, and limited severely, the power output and efficiency of petrol engines.

To the author it seemed that the sleeve valve should show to advantage because:

(1) The sparking-plug could be placed in the centre of a circular combustion space; thus the length of flame travel would be little more than the radius of the piston, and would be the same in all directions.

(2) The exhaust valve which, in those days of low compression ratios and therefore high exhaust temperature, was always the weak link, would be eliminated entirely.

(3) The absence from the combustion chamber of a highly heated exhaust-valve head should reduce considerably the tendency to both detonation and pre-ignition.

(4) Since the inlet ports opened directly into the cylinder and with probably a high orifice coefficient, there should be ample initial turbulence available.

(5) The breathing capacity available should be at least equal to that of any poppet-valve arrangement that could be accommodated.

(6) The whole engine could be made more compact and its frontal area less than that of an overhead poppet-valve engine.

Such arguments made a strong appeal to the Air Ministry, who encouraged and financed the author's firm to build and test an experimental single-cylinder unit using the Burt–McCollum single sleeve-valve.

Although the general mechanical behaviour and reliability of the single sleeve-valve as applied to pleasure-car engines had long since been proved, some misgivings were felt as to:

(1) Whether, in a high-duty engine, the piston would be able to get rid of its heat across the heat barrier represented by the oil film separating the sleeve from the cooled cylinder wall, and

(2) Whether the friction loss involved in moving the sleeve with its very large area of bearing surface might not prove excessive.

Both these misgivings were later proved to be groundless.

Comparative Tests on Sleeve-valve and Poppet-valve Engines

After a good deal of preliminary investigation work on the drawing-board, such an engine was built and put on test at the author's laboratory early in 1922. This was a fairly large and very robust engine of 5½ in. bore by 7 in. stroke, designed to develop maximum torque at a speed of 1300 r.p.m. or slightly above the normal speed of contemporary aero-engines. The sleeve, which was of cast iron, 0·125 in. thick, was operated by means of an overhung crankpin on the half-speed shaft, at first through the medium of a sliding block and pin joint as in the early Argyll engines, but this was soon after changed to a ball and socket joint which proved much more satisfactory (see fig. 17.1). Provision was made for varying, while running, the phase relation of the sleeve by sliding endwise one of a pair of single helical gears connecting the crank and layshafts.

At the same time, and partly by way of comparison, a single-cylinder poppet-valve engine, of the same bore and stroke, with four overhead valves was designed and built. This was equipped with a valve mechanism which allowed of varying independently both the phase and the period of opening of both the inlet and exhaust valves.

In the case of the sleeve-valve unit the cylinder was provided with three inlet and two exhaust ports, while, following the Argyll practice, the sleeve had only four ports, one of which, a common-purpose port, served alternately as an inlet or exhaust port. Fig. 17.2 is a cross-section of the cylinder and sleeve showing the location and arrangement of porting.

The total port area, both inlet and exhaust, of the two engines was substantially the same but, owing to the much more rapid opening and closing of the sleeve-valve ports, it was anticipated that a somewhat narrower timing would suffice, and this indeed proved to be the case.

In the poppet-valve engine with four valves vertically in the head, the combustion chamber was in the form of a flat disc, with the sparking-plug in the centre. In the sleeve-valve engine the water-cooled head

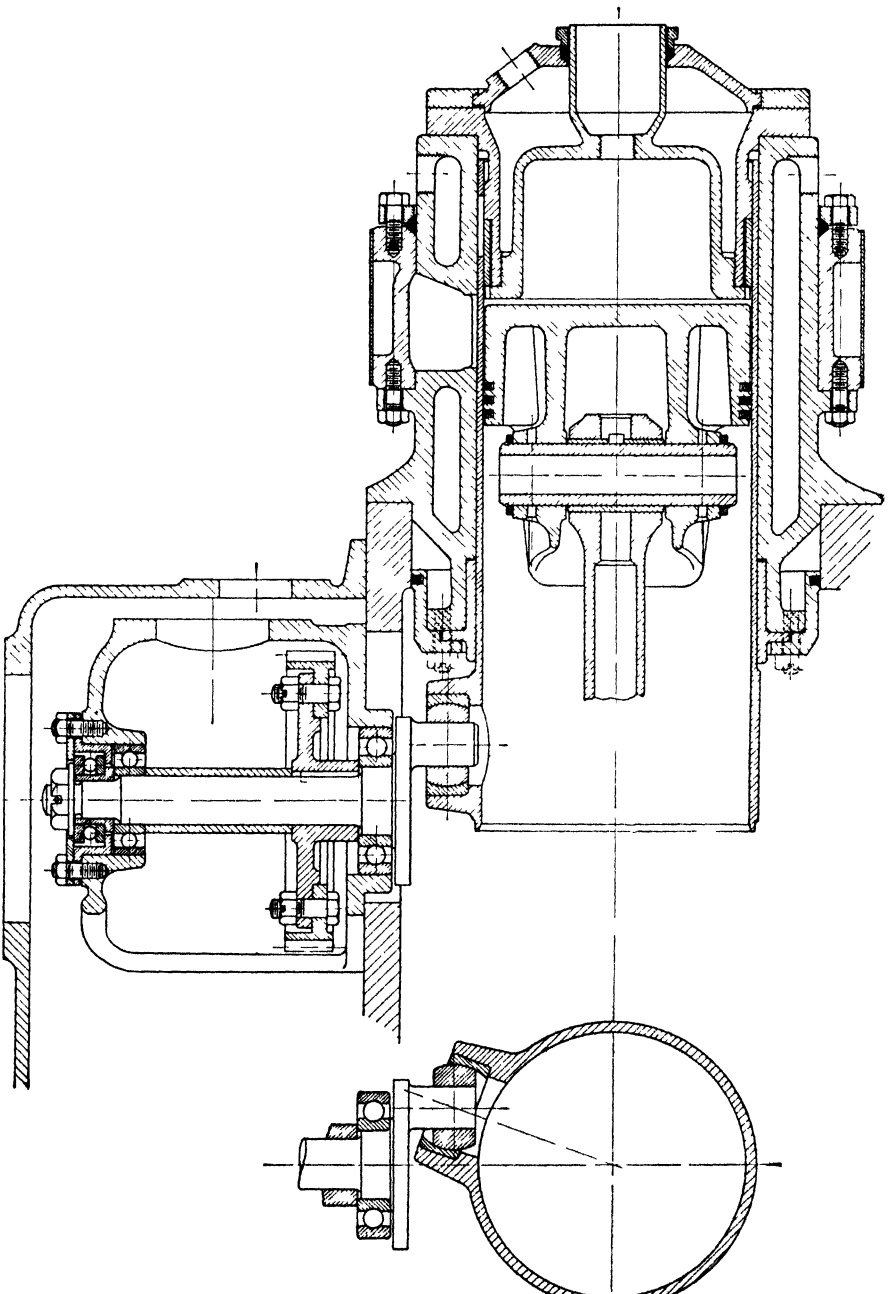

Fig. 17.1.—Experimental single sleeve-valve engine E30, bore 5½ in., stroke 7 in.

was, for experimental purposes, made in two parts so that by changing the inner member, the shape or capacity of the combustion chamber could be varied at will, and that without disturbing the head sealing-rings. In the first instance a combustion chamber in the form of a cylindrical pot, with a diameter of about 70 per cent that of the cylinder, was fitted. The piston had a flat top which, at top dead centre, came within $\frac{1}{16}$ in. of the head, thus giving a considerable amount of annular

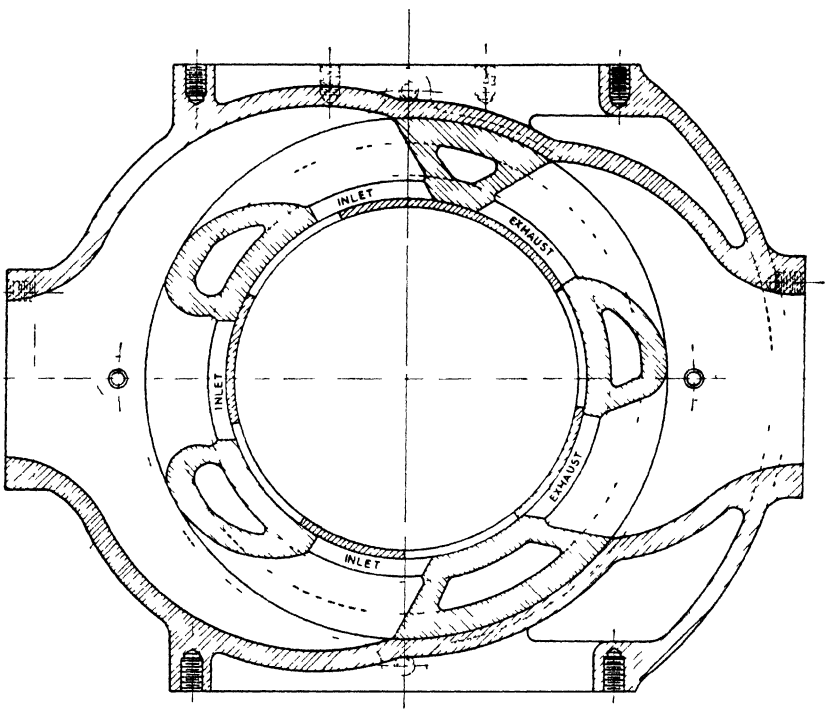

Fig 17 2 —Section through ports of E30 Mark I engine

squish and, at the same time, shortening the effective length of flame travel by the same means as had been employed a few years earlier in the case of the turbulent head for the side-valve engine.

At that time also it was thought to be desirable, if not essential, in view of the high outputs aimed at, to shield the sleeve as far as possible from the very high-temperature gases during combustion. To this end also it was provided that the crown of the piston at top dead centre should come as nearly as mechanical limits would allow into contact with the head.

On test, both engines, at the same compression ratio of 4·8 : 1, and with the optimum valve and ignition timing, gave to within two or three per cent the same B.M.E.P., viz. 120–125 lb. per sq. in. at

1300 r.p.m. and substantially the same minimum fuel consumption, but since, to the surprise of all, the mechanical losses of the poppet-valve engine proved to be higher, its indicated performance was very slightly the better of the two.

The following differences were at once observed:

(1) That when using the same fuel, with optimum ignition timing and a full-power mixture strength, the poppet-valve engine was on the verge of detonation, while the sleeve-valve showed no trace of detonation even when the ignition was advanced until the torque fell off.

(2) In the case of the poppet-valve engine the optimum spark advance was found to be 31° and the rate of pressure rise about 25 lb. per sq. in. per degree. In that of the sleeve-valve the optimum ignition timing was only 14° before top centre, and the rate of pressure rise 45 lb. per sq. in. per degree. Thus it appeared that the former was rather below, and the latter considerably above, the optimum degree of turbulence.

(3) Although, at that date, no technique had been evolved for measuring piston temperatures, both visual inspection and the minimum working clearance found necessary for the aluminium pistons indicated that the piston of the sleeve-valve unit was certainly no hotter than that of the poppet-valve at the same power output.

(4) The mechanical efficiency of the sleeve valve, as determined by the motoring test, was appreciably better than that of the poppet valve, a very unexpected observation.

(5) Inspection through the open exhaust ports of the sleeve valve showed that the gases within the cylinder were in a state of rapid rotation, for sparks from incandescent particles of detached carbon could be seen passing, as horizontal streaks, around the cylinder.

(6) At the higher speeds up to 2000 r.p.m. the sleeve-valve unit maintained its torque slightly better than the poppet-valve unit.

(7) While, as would be expected, the mechanical noise of the sleeve valve was markedly less, yet the combustion roughness was decidedly greater, as also would be expected from the very rapid rate of pressure rise.

(8) Provision had been made for the lubrication of the sleeve but was not found necessary; nothing other than casual splash from the pressure-fed big-end appeared to be needed, yet the sleeve was found always to be well and uniformly lubricated throughout its entire area both internally and externally even when shut down abruptly after running on full load. It was found necessary, however, to provide a pressure oil feed to the spherical joint operating the sleeve.

(9) The oil consumption of both engines was reasonably low, but that of the sleeve-valve slightly the higher of the two.

The next step was to raise the compression ratio of the sleeve-valve unit until on the verge of detonation, while still using the same general form of combustion chamber. This was found to occur at a compression ratio of 5·8 : 1, or just one whole ratio higher than that of the poppet-valve unit. At this higher ratio the brake mean pressure was found to be 137 lb. per sq. in. at 1300 r.p.m. and the minimum consumption 0·46 lb. per B.H.P. hour. At this ratio, however, the optimum ignition timing was only 11°, the rate of pressure rise had increased to nearly 60 lb. per sq. in. per degree, and the running of the engine was intolerably rough. Also, a new mechanical trouble intruded, namely, blow-by past the piston-rings. In the original piston the rings had been situated in their usual position with the top ring about ½ in. below the crown. In this position they over-ran, at top dead centre, the ports in the cylinder body but not those in the sleeve, which at top dead centre on the compression stroke had retired above the head sealing-rings (see fig. 17.3).

It seemed that under the higher gas pressures now ruling at the time of combustion, the sleeve was bulging into the ports to an extent sufficient to upset the sealing of the rings, or perhaps that the very rapid rate of pressure rise was causing the unsupported panels to vibrate. A static test in which a hydraulic pressure up to 800 lb. per sq. in. was applied to the inside of the sleeve showed no measurable bulging into the cylinder ports, but this was not convincing, for a series of local bulges below the limit of any ordinary means of measurement could well be sufficient to cause collapse of the rings and therefore excessive blow-by.

A new piston was therefore fitted with a much deeper top land such that, at the highest point of the piston, the top piston-ring was still just below the cylinder ports. This overcame the difficulty completely and no further trouble was experienced on this engine from blow-by, but later the very deep top land was found to be undesirable.

The next step was clearly to reduce the rate of pressure rise which was far beyond the optimum, thus rendering the running intolerably rough. A new combustion chamber formed as a shallow cone with the sparking-plug at the apex and having no squish area was fitted. This at once brought the rate of pressure rise down to below 40 lb. per sq. in. per degree with an optimum ignition timing of 16°, and the running became quite reasonably smooth, but at the same ratio it had a markedly increased tendency to detonate. To obviate this the compression ratio was lowered to 5·6 : 1, but none the less the overall performance was very slightly improved, for what had been lost by lowering the compression had been gained by the reduction of turbulence due to the elimination of squish.

This particular head was in the form of a rather shallow cone. It was thought that, by narrowing the cone angle and so reducing the

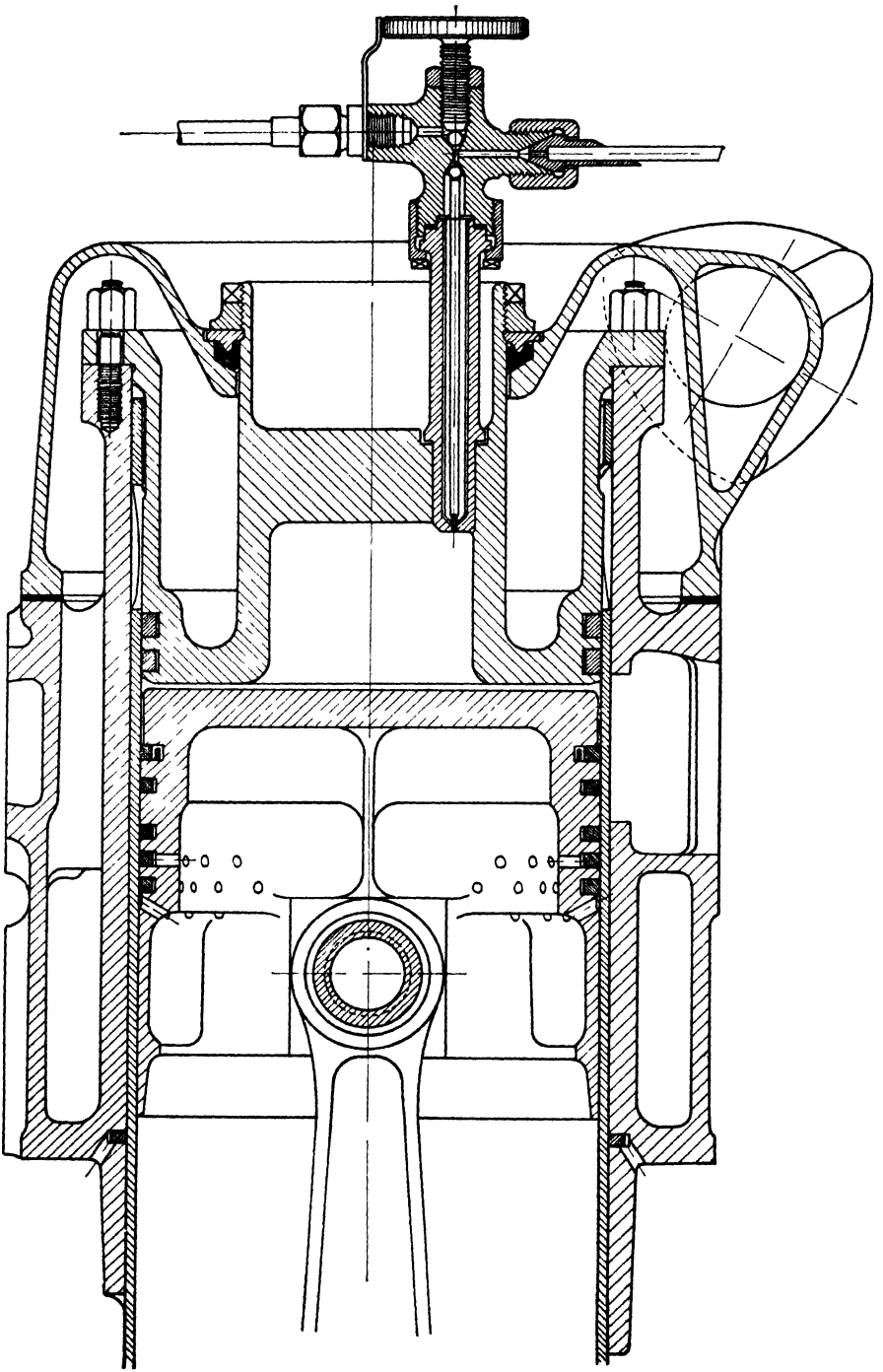

Fig. 17.3.—Single sleeve-valve C.I. engine

area of the flame front during the early stages of combustion, it might be possible both to slow down the whole process of combustion and still more to reduce the rate of change of pressure at the commencement. Accordingly a revised head was made with a narrow cone angle near the apex but flaring out progressively somewhat like the mouth of a trumpet. This had, up to a point, the desired effect: the mean rate of pressure rise was reduced to about 25 lb. per sq. in. per degree, the optimum ignition advance was now extended to over 30°, and the running extremely smooth and quiet, but the performance generally was considerably depressed, and the tendency to detonate increased. Since the objective at that time was the aero-engine, it was obvious that one could not afford to sacrifice performance for the sake of luxury, but for pleasure-car work it seemed that the narrow angle conical combustion chamber was probably the ideal, and this was later applied in the design of the 25/70 H.P. Vauxhall sleeve-valve engines of 1925.

Prolonged endurance testing had revealed the undesirability of a very deep top land on the piston for, during a long spell of light-load running, carbon would gradually build up on this land until most of the running clearance was taken up. Then when full load was applied the expansion of the piston would render the top land bottle-tight and so cause severe dragging and sometimes even seizure, whereas with a relatively shallow land, although the same thing would occur, the carbon would be dragged off much more easily and without risk of seizure.

It was decided therefore to abandon the idea of using the top land to protect the sleeve and to lower the piston crown. This meant, in effect, a return to a combustion chamber similar to that of the poppet-valve engine, viz. a more or less flat disc, and to the exposure of a considerable area of the sleeve to the maximum temperature. This arrangement gave a better performance than had been expected; the running was rather rough and the rate of pressure rise about 40 lb. per sq. in. per degree, the optimum ignition advance being about 15°. Its resistance to detonation was, however, good, and it was found possible to return to a compression ratio of 5·8 : 1. No ill-effects were found from the exposure of the sleeve at top dead centre.

Very early in the proceedings it had been noted that the whole body of the gases within the cylinder was in a state of rapid rotation, but at that time experience was lacking as to the precise effect of rotation or swirl upon the spread of combustion. This led therefore to an investigation into the causes, effects, and control of air-swirl. As to the causes, in the single sleeve-valve engine the inlet ports were opened by the angular movement of the sleeve and closed by its upward motion. During the early opening period the orifice is faired on one side only by the edge of the cylinder port and the air therefore enters obliquely, causing the charge to rotate in the opposite direction to that in which

the sleeve is moving (see fig. 17.4). This more or less tangential entry sets up a high rotational swirl. As the opening develops so this effect diminishes until towards the latter end of the opening period it ceases altogether and the direction of entry is then controlled by the contour of the passage leading to the port.

Blowing tests with an anemometer inside a mock-up sleeve gave the results shown in the middle dotted curve of fig. 17.5, while the other two curves show the effect of using a deflector in the passage-way

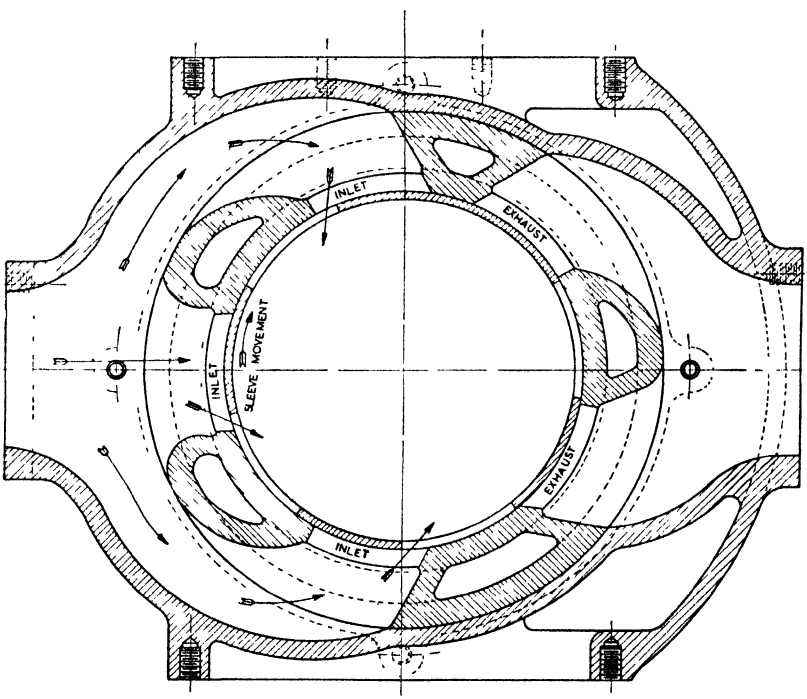

Fig. 17.4.—Section through ports of E30 Mark I engine showing direction of air-flow

set (*a*) to stimulate and (*b*) to discourage the initial swirl. In the latter case it will be observed that the air-swirl is actually reversed during the latter part of the entry period.

As a next step a special anemometer was developed which could be fitted inside the combustion chamber to record the mean rotation of the air, while the engine was motored under full compression. Although, of course, this recorded a mean rate only, it was influenced mainly by the movement of the air at a time when its density was greatest, i.e. at the end of the compression stroke. The relation between anemometer speed and crankshaft speed was expressed as the swirl ratio, viz. if the anemometer made four revolutions to one of the crankshaft this was expressed as a swirl ratio of 4. It was then found possible, by fittting

quite small baffles in the induction passage, to gain complete control over the air-swirl and even, if desired, to reverse it, while, with the help of the anemometer, it was a simple matter to calibrate the air-swirl in terms of baffle position.

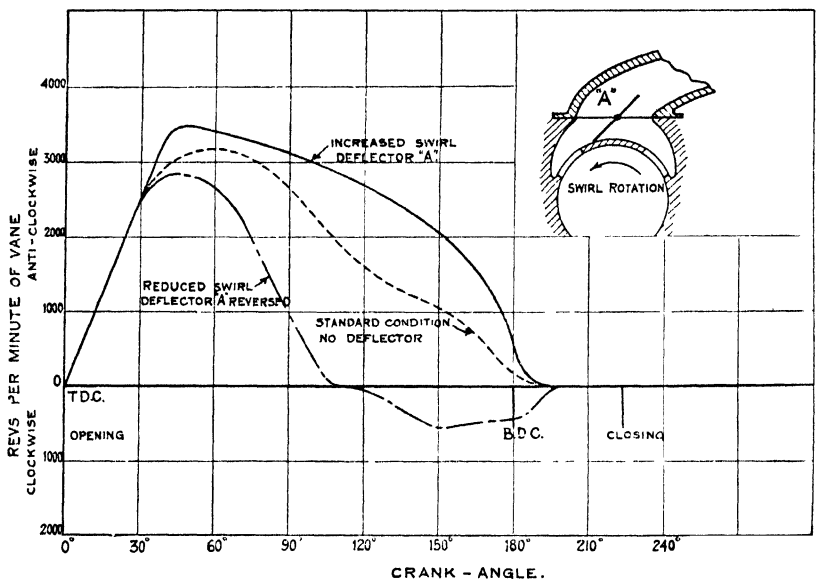

Fig. 17.5.—Blowing swirl test on No. 4 cylinder with manifold in position (S55–4); air pressure, 1 in. Hg.

Tests were then run over the whole range of swirl ratio using the flat or lenticular combustion chamber. At once it was found that the natural swirl ratio, viz. between 4 and 5 : 1, was much too high, and that optimum results were obtained with a ratio in the region of 1·5 to 2·0 : 1. The effect of reducing the swirl ratio from about 4·5 to 2·0 was:

(1) To increase the brake mean pressure from 136 to 146 lb. per sq. in.

(2) To reduce the minimum consumption from 0·46 to 0·445 lb. per B.H.P. hour.

(3) To increase the optimum ignition advance from 16° to 21° with very much smoother running.

(4) To reduce the total heat flow to the cooling water from 70 to 64 per cent of the B.H.P.

At zero swirl the results were not quite so good, but it must be remembered that zero swirl, as recorded by the anemometer, means that two equal and opposite swirls have cancelled one another out and may therefore denote a high degree of turbulence (see figs. 17.6 to 17.9). Later it was found that with a high swirl ratio there was a tendency

for any unevaporated droplets of petrol to be centrifuged out on to the walls of the sleeve and thence eventually to find their way into the crankcase and so dilute the lubricating oil; this was, of course, especially noticeable when using fuels of relatively low volatility.

The final results with the experimental unit, as recorded above, represented a performance far in advance of that achieved by any poppet-valve engine on the low-octane petrol of that date.

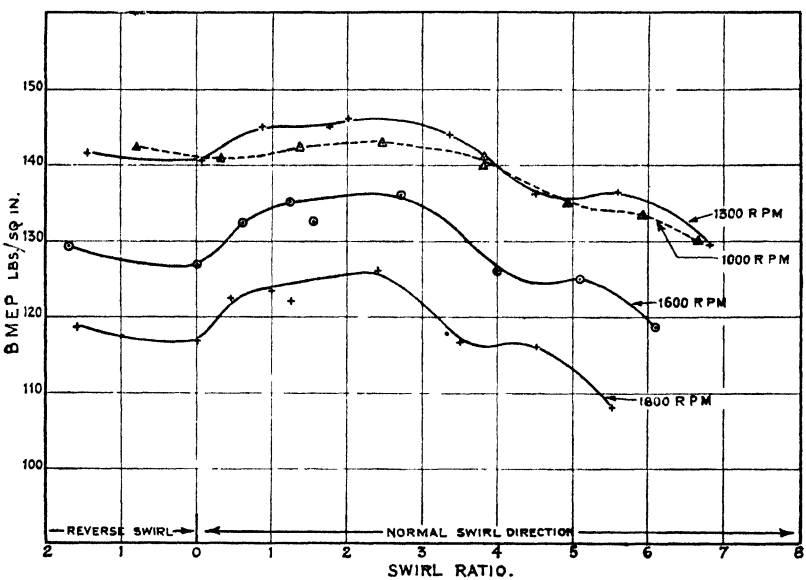

Fig. 17.6.—Relation between swirl ratios and maximum power at various speeds

C.R. = 5·88 : 1. Central sparking-plug. Lenticular combustion chamber

Motoring loss at all swirls:	R.P.M.,	1000	1300	1600	1800
	B.M.P.,	13·0	16·0	19·1	21·0 (lb./sq. in.)

Because of its tendency to detonate on the same fuel, it was not found possible to increase the performance of the corresponding poppet-valve engine beyond a B.M.E.P. of 128 lb. per sq. in. which also represented a high performance for that date, viz. 1923–24.

As regards the mechanical side, surprisingly few mechanical difficulties were encountered; apart from the trouble with piston blow-by mentioned earlier, there had been some trouble with the cylinder head sealing-rings, due to blow-by and sticking in their grooves, and many different combinations and types of ring were tried. Taken by and large, the best all-round results were obtained using ordinary standard piston-rings, unpegged, but with the horns very slightly toed-in by hammering, or heat treatment, to avoid breakage as they passed over the sleeve ports. No trouble of any kind was experienced with the

sleeve itself or with the sleeve-operating mechanism after the appropriate working clearance had been found, viz. about 0·0005 in. per inch of cylinder diameter, and after the white metal spherical joint had been adopted and pressure-lubricated. No evidence was found to suggest that the piston was running too hot; indeed such evidence as was available indicated that it was running at a lower temperature than that in the corresponding poppet-valve engine.

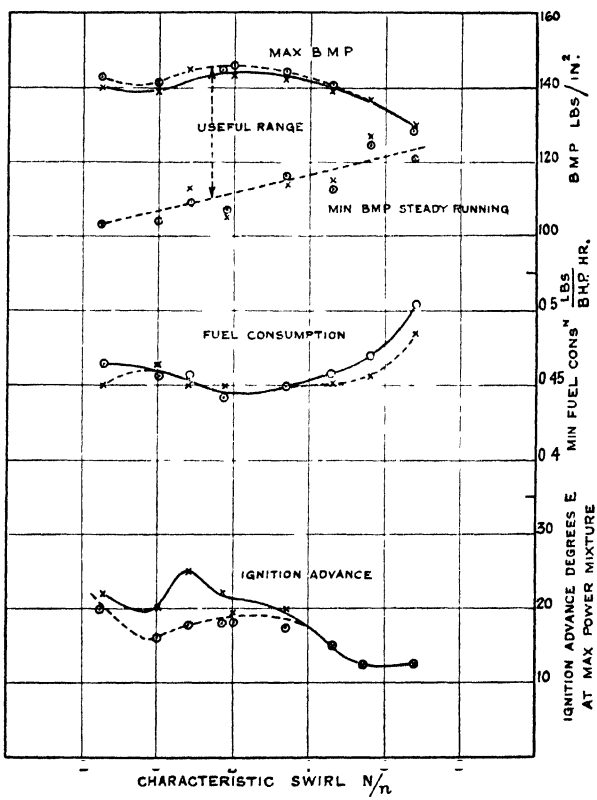

Fig. 17.7.—Effect of swirl on fuel consumption

Engine speed, 1300 r.p.m. C.R., 5·88 : 1. Motoring friction at all swirls, 16·0 lb. per sq. in. B.M.P.

× ——— × Central sparking-plug
○ - - - - - - ○ Offset sparking-plug

With a view to reducing the oil consumption past the outside of the sleeve, a contracting oil scraper-ring was later fitted close to the bottom of the cylinder. This proved quite effective and still left the sleeve well lubricated externally.

A puzzling feature throughout had been the high mechanical efficiency of the unit as indicated by the motoring tests and confirmed

by the high actual performance, for, despite the relatively heavy reciprocating parts, the total motoring friction amounted to only 16 lb. per sq. in. at the normal running speed of 1300 r.p.m., or less than that of any single-cylinder poppet-valve engine previously tested in the author's laboratory.

It is impossible to believe that the power required to operate the sleeve, with its very large rubbing surface, can be less than the almost negligible amount required to operate poppet valves. When motored individually at or near working temperature, and without any piston

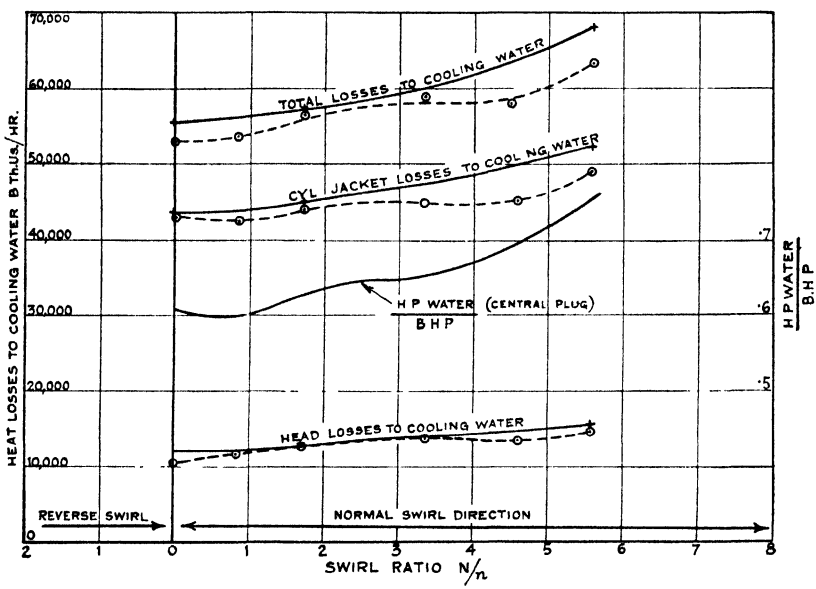

Fig. 17.8.—Heat losses for constant fuel consumption (17 pints/hour) over the swirl range

Engine speed, 1300 r.p.m. C.R., 5·88 : 1. Lenticular head
Champion No. 8 sparking-plug: + ——— + $1\frac{7}{16}$ in. offset
O - - - - - - O Central

or gas loading, the power absorption of the sleeve was certainly surprisingly low, viz. equivalent to about 2 lb. per sq. in. B.M.E.P., but still considerably greater than that absorbed by the valve mechanism of the poppet-valve engine.

It is true, of course, that any point on the sleeve is moving against the cylinder at a nearly uniform angular velocity, an ideal condition for fluid lubrication, and that that velocity is relatively low. None the less one would have expected that viscous friction alone over so large an area would have been considerably greater.

Again, there were clear indications that, under the combined effects of gas inflation, piston drag and side-thrust, the sleeve friction was

increased considerably at certain phases in the cycle. For example, examination of the teeth of the sleeve-operating gears showed noticeably heavier loading over a period of about 120 crankshaft degrees, corresponding to about the last 30 degrees of the compression, and the first 90 degrees of the expansion stroke.

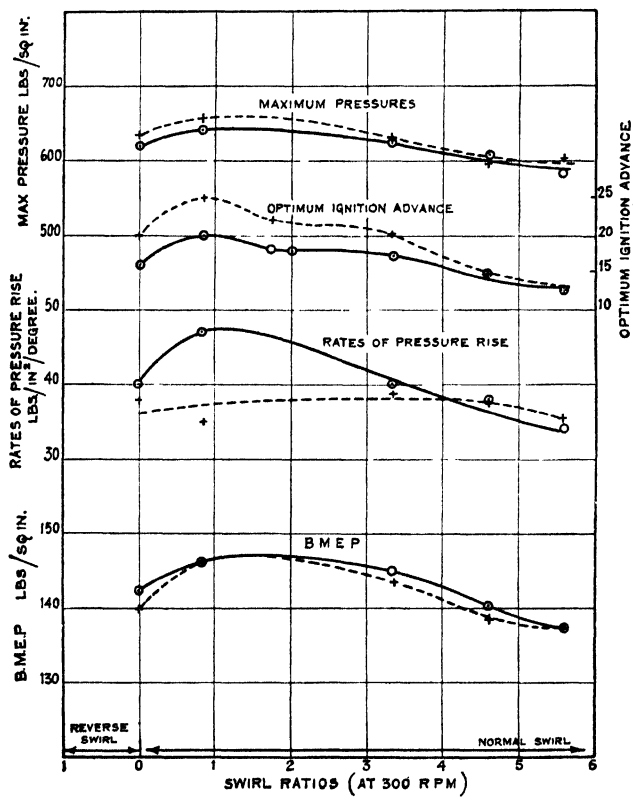

Fig. 17.9.—Summary of maximum pressures and rates of pressure rise at optimum ignition advance over the swirl range

Engine speed, 1300 r.p.m. C.R., 5·88 : 1. Lenticular head. Maximum power mixture strength

Champion No. 8 sparking-plug: ○ ——— ○ Central
+ - - - - - - + $1\frac{7}{16}$ in. offset

Simple arithmetic showed that the elastic stretch of the thin sleeve under the peak gas pressures would be sufficient to take up all the working clearance allowed, and that the oil film must therefore be heavily loaded during one phase of the cycle, while examination of the teeth of the driving gears indicated also that reversals of loading were taking place, presumably at times when the piston was dragging the sleeve along with it, all of which considerations would lead one to

expect that the sleeve friction under operating conditions would be of quite a high order.

No simple means could, at that time, be devised for measuring the power absorption of the sleeve under actual working conditions, nor, so far as the author is aware, have any records been obtained even to-day. Attempts to measure the maximum torque of the sleeve drive by means of braking pieces in shear proved abortive, for all failed sooner or later due to fatigue.

It is at least conceivable that the motion of the sleeve had the effect of reducing piston friction. It was known even at that date that in the usual stationary cylinder or liner the lubrication of the piston and piston-rings was closely akin to boundary lubrication at either end of the stroke, that is when relative motion between the piston and cylinder ceased, and that fluid lubrication was not restored until the piston had travelled some distance on its stroke. It seemed possible, therefore, that the continuous movement of the sleeve, even while the piston was at rest, permitted of fluid lubrication being maintained throughout the entire cycle, and fresh colour was added to this possibility by the observation that the sharply localized wear, always found in the liners of poppet-valve engines at the point where the top piston-ring comes to rest at top dead centre, was absent in the sleeve valve.

It was difficult to confirm or disprove this theory, for no truly comparative tests could be made under anything approaching actual operating conditions with the sleeve (*a*) stationary and (*b*) in operation.

Later tests on large numbers of sleeve- and poppet-valve engines of various shapes and sizes, while revealing many wide and somewhat unaccountable variations in the mechanical efficiency of both types, indicated that, taken by and large, the overall mechanical losses of the sleeve-valve engine were usually less than those of the poppet-valve, and this has been confirmed in the case of the many thousands of sleeve-valve aero-engines in service during the second world war.

Again, later tests, when the technique of measuring piston temperatures by means of fusible plugs had been developed, confirmed that the piston temperature in a liquid-cooled single sleeve-valve engine was actually a little lower than in a poppet-valve engine of the same dimensions and output. At first sight this would seem very surprising, in view of the fact that the heat from the piston must pass through the sleeve, through an oil film, and thence to the cooled cylinder walls. Investigations of heat flow carried out with traversing thermocouples revealed, however:

(1) That provided the working clearance between sleeve and cylinder barrel was kept small, the moving oil film was a very efficient convector of heat.

(2) That the movement of the sleeve served very effectively to transfer heat from one area of the cylinder barrel to another, and so to remove any localized areas of high temperature; thus the temperature gradient along the length of the cylinder barrel was very much flatter than in an engine with a stationary liner and the drop at the water/metal boundary in consequence considerably less. It seemed, then, that the reduction both in the temperature gradient through the cylinder wall and in the temperature drop at the water/metal boundary compensated, and apparently more than compensated, for the thermal resistance of the sleeve and oil film.

(3) There were some indications that the transfer of heat from a piston to a twisting sleeve was greater than to a stationary liner.

At a very early stage in the investigations just described, it became evident that the single sleeve would lend itself admirably as a unit for research into the problems of compression ignition, for:

(1) Since the cylinder head was unencumbered by valves, one would have complete freedom of manœuvre as regards the form or capacity of the combustion chamber.

(2) With the sleeve valve, one could have a very large measure of control over the air movement in the cylinder, a very valuable asset.

A second identical unit was therefore constructed for this purpose, on which a wide range of combustion chambers and combustion systems were tried out, including pre-combustion chambers and open chambers of various shapes and forms.

These early experiments led at times to the development of excessively high pressures of the order of 1200–1500 lb. per sq. in., and two failures of the thin cast-iron sleeve occurred. In one instance a panel of the sleeve was blown out through one of the ports in the cylinder, and, in the other, the sleeve was split from the upper edge of one of the ports to the top.

A change was therefore made from cast iron to steel and no further trouble was experienced from this source. Despite the very high gas pressures, there was still no evidence of any appreciable sleeve friction, either by its reflection on overall performance or by any signs of distress on the part of the operating mechanism. Both units proved to be mechanically very reliable and remarkably consistent, and both had very quickly achieved a high level of performance; that of the petrol unit on what was then about 60 octane fuel had reached a brake mean pressure of 146 lb. per sq. in., with a minimum consumption of 0·445 lb. per B.H.P. hour, while that of the C.I. engine at the same speed, viz. 1300 r.p.m., and with the best combustion chamber and optimum air-swirl ratio, had achieved a B.M.E.P. of 121 lb. per sq. in. at the

clean exhaust limit, and a minimum consumption of 0·355 lb. per B.H.P. hour. In later versions of the sleeve-valve C.I. engine with multiple cylinders, a minimum consumption of only 0·34 lb. per B.H.P. hour was attained which, so far as the author is aware, remains to this day almost a record figure.

The Sleeve-valve Engine at High Speeds and Heavy Supercharge

Once satisfied that the sleeve-valve engine was capable of a high performance, and apparently free from any fundamental mechanical defects, the next step was to explore:

(1) Its behaviour up to very high speeds.
(2) Its behaviour under heavy supercharge.

For these purposes, two new units were designed and built, a small

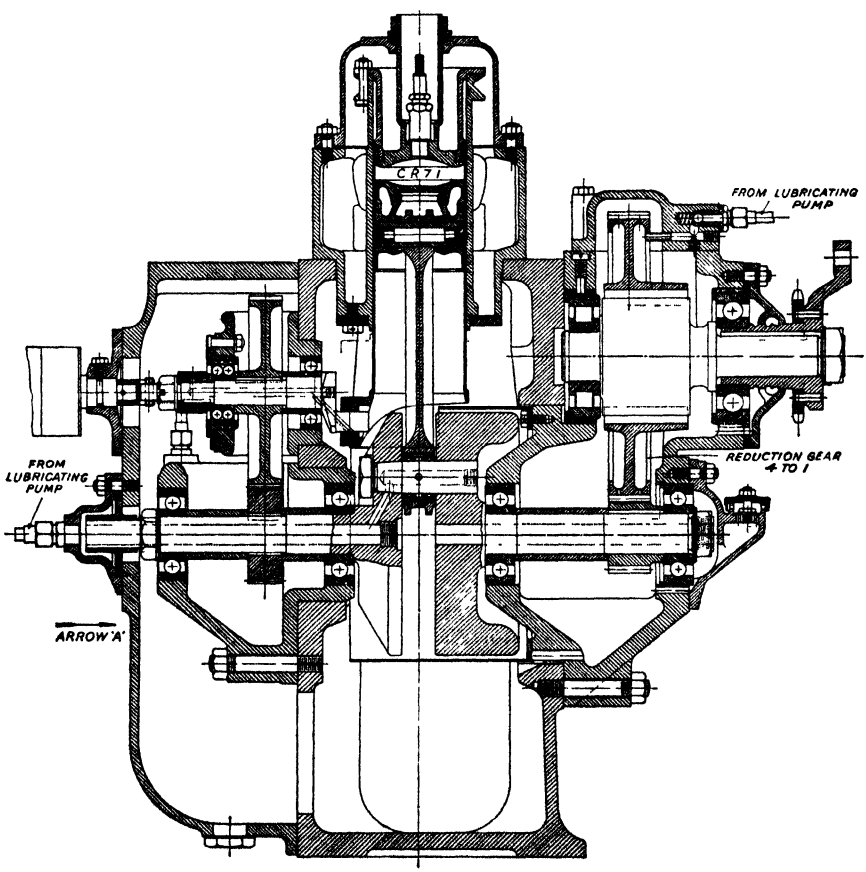

Fig. 17.10.—General arrangement of 68½ mm. × 90 mm. high-speed sleeve-valve engine

unit of 68·5 mm. bore by 90 mm. stroke intended to run at speeds up to 6000 r.p.m. corresponding to a piston speed of 3600 ft. per min. (see figs. 17.10 and 17.11), and a larger unit of 4½ in. bore by 5½ in. stroke, of very robust construction, designed for supercharge pressures up to 4 atmospheres absolute.

It is not proposed to deal at any length with the geometry of the sleeve valve and its porting arrangements, for this will be obvious to anyone who cares to set it out on the drawing-board. The vertical movement of the sleeve is, of course, controlled solely by the stroke of the crank or beam by which it is operated. The angular movement is controlled, in the case of a crank-operated sleeve, by the distance of the centre of the spherical joint from the centre of the sleeve. If the spherical joint were actually at the circumference of the sleeve, then the motion of any point on the sleeve would be virtually circular. As the operating point is moved farther from the centre of the sleeve, so the motion of the sleeve becomes more and more elliptical with its major axis vertical. It will be evident, therefore, that there are two major variables:

(1) The vertical stroke which determines the height or depth of the ports.

(2) The angular movement which controls the width and therefore the number of the ports.

Thus, in theory at any rate, the total available port area is controlled solely by the vertical movement, while the angular movement determines, not the total aggregate area, but rather the number of ports. Hence, if we halve the angular movement, we halve the width of all the ports, but can employ double the number. In practice, of course, it is not desirable to have too many ports; on the other hand, the width of any one port in the sleeve must not be such that the cylinder head sealing-rings will not safely pass over it, nor must the size of any one window be so great that the sleeve will tend to bulge into it or, in extreme cases, to burst through. Where very high pressures are involved as in C.I. engines, it is desirable to employ relatively narrow ports, merely on the grounds of sleeve support, and to this end to make use of an operating mechanism which will give a relatively narrow ellipse, such as the overhung beam type (see fig. 17.12); in this case there are eight ports, five inlet and three exhaust, but, in most cases, it is preferable, on purely mechanical grounds, to employ three inlet and two exhaust ports, a combination which lends itself best to the simple crank operation. It will be evident, also, that any or all of the sleeve ports can be used as common-purpose ports, thus nearly doubling the total effective port area, that is to say, the same port in the sleeve can control alternately both an exhaust and an inlet port in the cylinder, but to carry this to its logical conclusion will

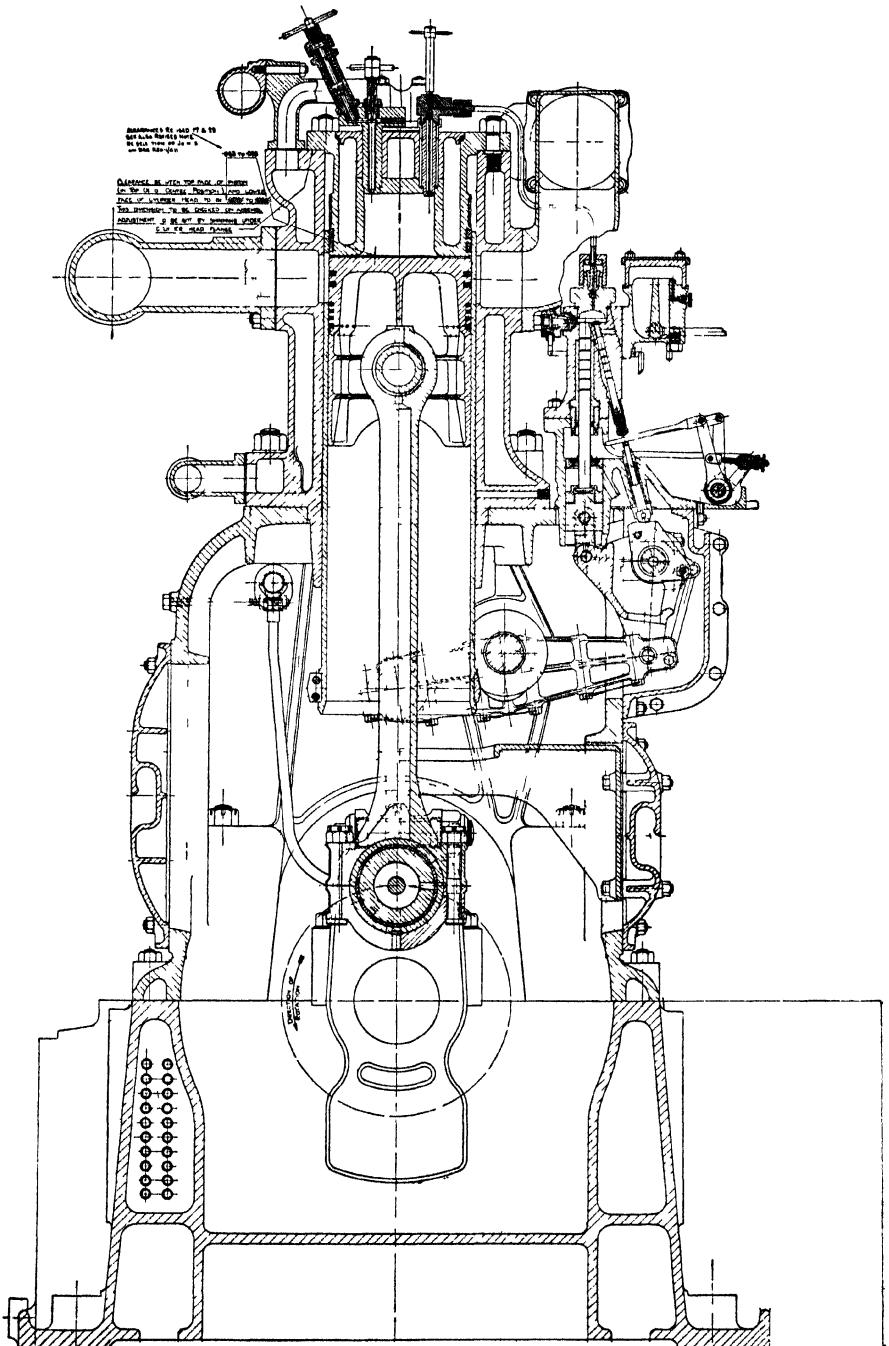

Fig. 17.12*a*.—Cross-sectional arrangement of 7½ in. × 12 in. Brotherhood-Ricardo high-speed Diesel engine

involve having alternate inlet and exhaust passages and pipes all the way round the cylinder, which would be impracticable in all but very extreme cases, such perhaps as single-cylinder racing-engines. In practice it is usually convenient to employ only one common-purpose port. Fig. 17.13 shows a typical port layout, together with the port-opening diagram of a 3- and 2-port cylinder and sleeve.

In the case of the small high-speed unit, the primary objective was to explore the mechanical behaviour of the sleeve valve at very high revolution speeds. To this end, therefore, it was designed with all ports common-purpose, thus giving the maximum possible breathing capacity. Fig. 17.14 shows a cross-section of the engine and fig. 17.15 the layout of ports showing, incidentally, the anti-swirl baffle in one of the inlet ports. In the first instance a cast-iron cylinder was used with a very thin steel sleeve 0·05 in. thick. With a compression ratio of 7·0 : 1, this little unit developed a maximum B.M.E.P. of no less than 163 lb. per sq. in. unsupercharged at a speed of 3300 r.p.m., falling to 140 lb. at 5000 r.p.m. Trouble was, however, experienced due to violent blow-by of the piston-rings; this occurred only at speeds in excess of 5000 r.p.m. and its onset was quite sudden. In view of past experience with the larger unit, a new piston was fitted with the rings still lower down; this, however, gave no improvement. The trouble was next attributed to ring " flutter ", that is to say, a radial vibration of the rings, though this seemed hard to believe. Rings of varying radial thickness were next tried with little or no result. Varying the width of the top ring did, however, have the effect of raising or lowering the critical speed at which blow-by occurred, and with the narrowest ring fitted, it was found possible to postpone it to 6000 r.p.m. The true cause of the blow-by was as explained in Chapter XIV, but this was not appreciated at the time. As, however, 6000 r.p.m. had been the goal and could just be reached by the use of a very narrow top ring, this was considered adequate, although it was still well below the peak of the power curve.

Although the mechanical efficiency of this little engine was remarkably high, despite the introduction of a reduction gear between the crankshaft and the dynamometer coupling, yet the very high B.M.E.P. attained without supercharging, and without resort to scavenging by port overlap, could be explained only by the existence of some ramming effect from the induction pipes.

Throughout all the tests the sleeve valve itself gave no trouble of any kind. As a next step, the unit was supercharged, in this case using a high proportion of benzol in order to eliminate detonation, when an output of 110 B.H.P. per litre was attained, viz. a B.M.E.P. of 238 lb. per sq. in. at a speed of 6000 r.p.m. At this high output and after prolonged running, the operating ball, which was of white metal, failed, due apparently to high temperature rather than overloading.

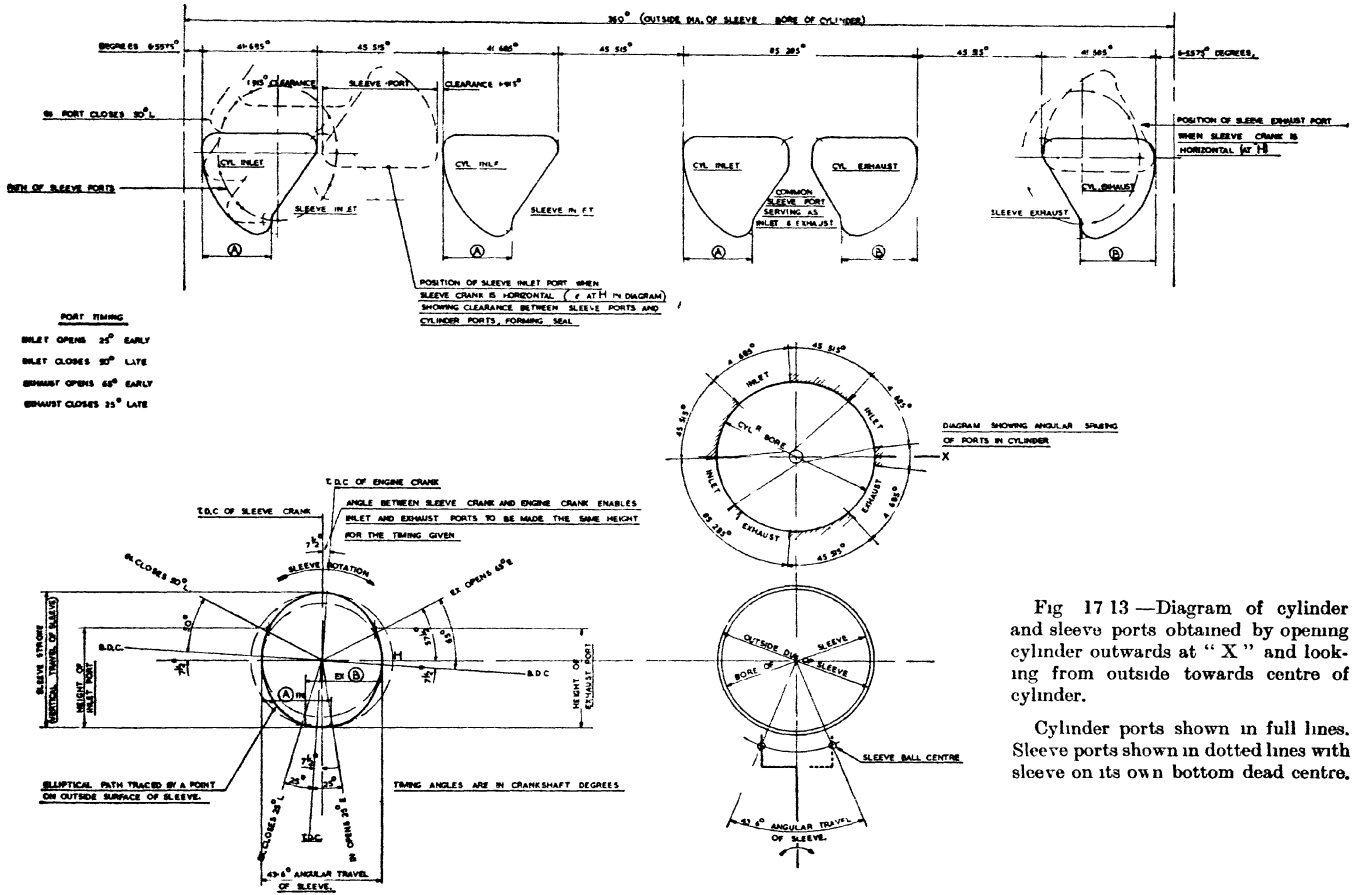

Fig 17 13 —Diagram of cylinder and sleeve ports obtained by opening cylinder outwards at " X " and looking from outside towards centre of cylinder.

Cylinder ports shown in full lines. Sleeve ports shown in dotted lines with sleeve on its own bottom dead centre.

By increasing the flow of cooling oil to the ball joint, it could just be kept alive at this duty, but it appeared that at these very high outputs, the temperature of the sleeve was too near the melting-point, or at

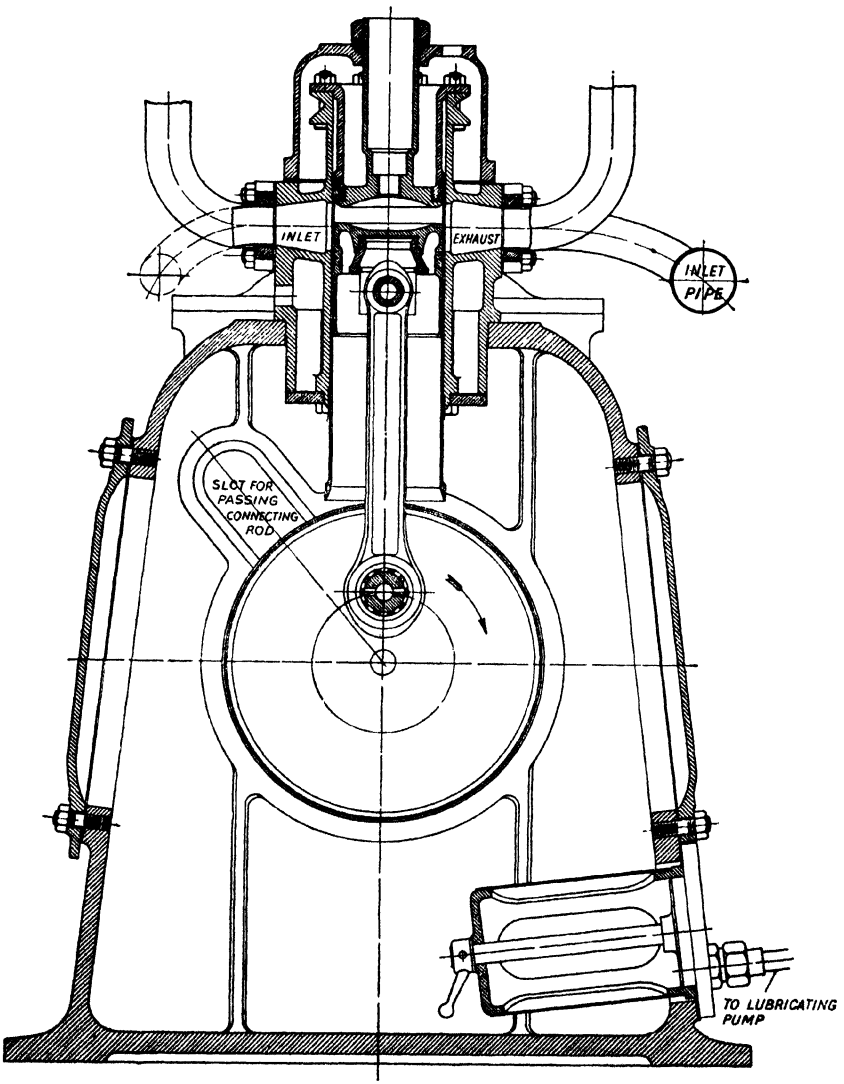

Fig. 17.14.—General arrangement of 68½ mm. × 90 mm. high-speed sleeve-valve engine. View looking in direction of arrow A of fig. 17.10

least the plastic phase of ordinary white metal, and that some material with a higher melting-point would have to be substituted. The use of white metal was attractive because it allowed of the ball socket being

cast in position, a very simple and cheap operation which involved no machining at all and had been found to be quite adequate for all normal outputs, but it became evident that, for very high duties, it would be necessary to substitute a bronze or aluminium ball and this practice was adopted later for all the sleeve-valve aero-engines.

In the case of the highly supercharged unit and in view of the high maximum pressures that would be expected, a fairly thick steel sleeve

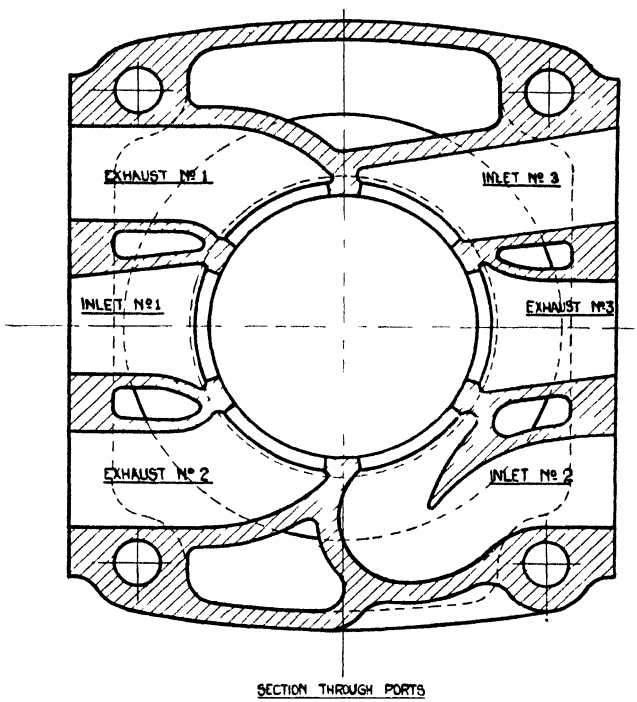

Fig. 17.15.—Cross-section of cylinder of small high-speed single sleeve-valve engine showing anti-swirl baffle in one inlet port

was used, and all the working parts designed for a peak pressure of 2000 lb. per sq. in. and a normal speed of 1500 r.p.m.

This very robust experimental unit was employed first for mechanical tests of the sleeve valve up to very high supercharge pressures of the order of 4 atmospheres absolute during which a B.M.E.P. of 540 lb. per sq. in. was reached at a compression ratio of 4·3 : 1 when using a petrol-benzol mixture.

After the completion of several long endurance tests at brake mean pressures ranging between 300 and 500 lb. per sq. in., during which neither the sleeve valve nor its operating mechanism showed any signs of distress, this engine, which had proved so reliable and

consistent, was devoted to a long research extending over several years into the general problem of supercharging a spark-ignition engine and many valuable data were obtained on such factors as:

(1) The effect of supercharging on detonation and the relationship, at any given compression ratio, between the indicated mean pressure and the octane number of the fuel required.

(2) The effect of supercharging upon the distribution of heat to the cylinder walls, cylinder head, etc.

(3) The effect of intake air temperature upon both the mean effective pressure and upon the tendency to detonate.

(4) The effect of supercharge upon fuel economy, mixture range, and rate of pressure rise.

The conclusions drawn from these and other and more recent tests on supercharged engines are dealt with more fully in the chapters dealing with "Supercharging" and "Distribution of Heat".

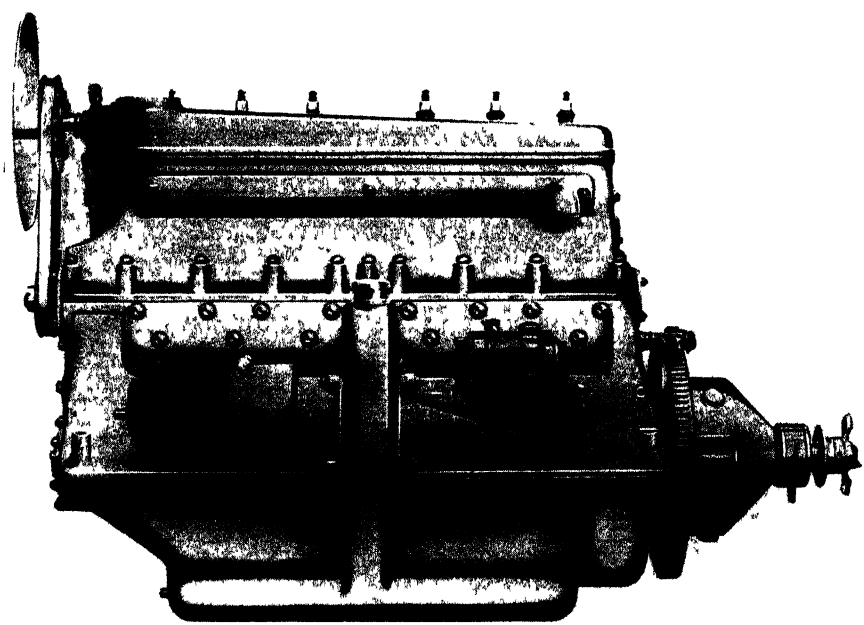

Fig 17.16.—Six-cylinder Vauxhall single sleeve-valve engine

Some years later, and in preparation for the 1931 Schneider Trophy Race, this unit was employed for testing sparking-plugs to be used for that race and, to this end, carried out successfully many long endurance runs at a B.M.E.P. throughout of 500 lb. per sq. in.

Throughout all the testing, covering many hundreds of hours, neither the sleeve valve nor the original white-metal sleeve driving

ball, gave any trouble at all. A number of different types of sealing-ring were tried in the cylinder head, but once again the conclusion was reached that the normal piston-ring gave, on the whole, the best results.

By this time—about 1925—sufficient evidence of the good behaviour of the single sleeve had been acquired both to justify laying out the design for a full-scale experimental aero-engine and to commence experiments on actual prototype cylinders for more advanced types of

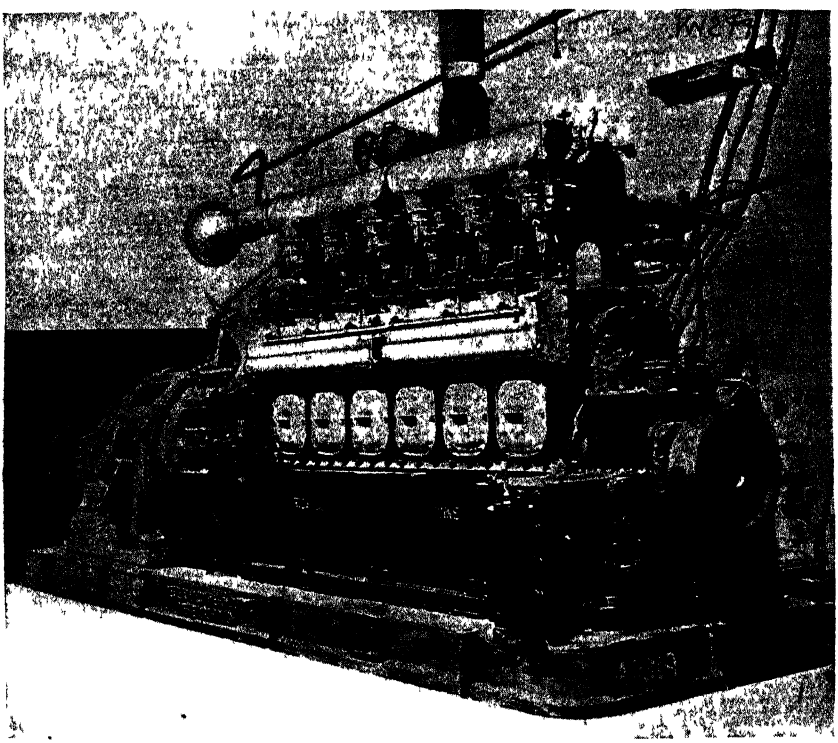

Fig. 17 17.—Brotherhood-Ricardo six-cylinder engine

aircraft engine. A six-cylinder sleeve-valve car engine had been designed and developed for Messrs. Vauxhall Motors (see fig. 17.16), and a prototype of this had been subjected to a prolonged endurance test including two consecutive 550-hour non-stop runs equivalent, in all, to about 50,000 miles on the road, while a prototype single sleeve-valve C.I. engine, designed for Messrs. Peter Brotherhood, had also been developed. A considerable mass of experience had thus been accumulated and that over a range of size from the small high-speed unit just described, to the 7½ in. by 12 in. Brotherhood engine (see figs. 17.17 and 17.18).

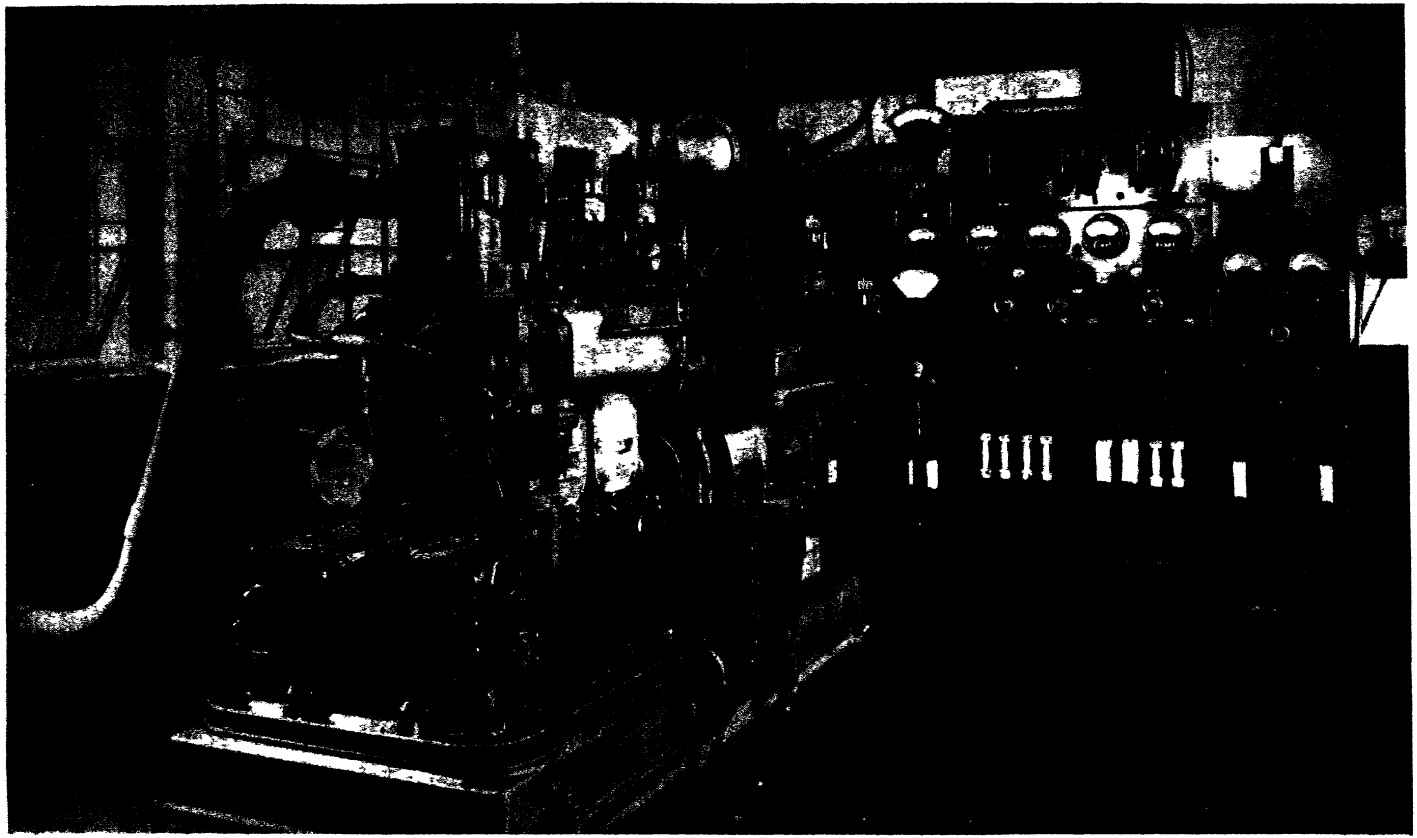

Fig. 17.18.—R 100–2 engine dynamo unit and power station switchboard

It had been demonstrated:

(1) That the performance obtainable from the sleeve-valve was better than that from a corresponding poppet-valve engine, mainly by virtue of the higher ratio of compression that could be used.

(2) That from a mechanical point of view, the sleeve valve was reliable, for it had been tested both at rotational speeds and at mean pressures more than double those that had been attained by any aero-engine of that date.

(3) That it was unaffected by the lead deposits which at that date were causing great trouble with poppet valves.

(4) That by virtue of the readily detachable cylinder heads and the absence of poppet valves, maintenance problems would be simplified.

The possibility, and the obvious advantage from a weight point of view, of running the sleeve valve direct in an aluminium cylinder had, of course, been foreseen, and an all-aluminium cylinder had been fitted to the small high-speed unit, and had given entirely satisfactory results, but in larger sizes of cylinder difficulty was anticipated owing to the very much higher thermal expansion of aluminium as compared with any material that could be used for the sleeves. It was clearly essential to provide sufficient working clearance between the sleeve and cylinder to allow of the engine being started from cold at the lowest ambient temperature, and this might mean that at working temperatures the clearance would be excessive, for the earlier tests had shown that beyond a certain limiting value, any further increase in sleeve clearance resulted in failure of the intervening oil film to transfer heat from the sleeve to the cylinder and that this appeared to be an absolute, not a relative value; thus the tests with an aluminium cylinder and carbon-steel sleeve on the small unit, though successful in a small cylinder, were not wholly convincing.

Some preliminary tests carried out on one of the 5½-in. units using an aluminium cylinder and a cast-iron sleeve with normal cold working clearance had shown abnormally high piston and sleeve-valve temperatures—with the accompanying troubles of gummed-up piston and head-rings—when operating at high coolant temperatures, and therefore with a very large working clearance, though with cold-water circulation no such troubles occurred, nor had they been apparent on the small unit of about half the cylinder diameter. It was found, however, that on this 5½-in. cylinder, if the working clearance between the sleeve and cylinder was reduced to the bare minimum which would allow of free movement when cold, the clearance at a coolant temperature of 100° C. was still satisfactory; it was concluded therefore that for liquid-cooled cylinders of, say, 5 in. diameter or less, and provided that the clearance was controlled to within close limits, the combination of an ordinary

aluminium alloy and a cast-iron or carbon-steel sleeve was just permissible. Fortunately the wear between the sleeve and cylinder was found to be almost negligible, so that the initial clearance remained virtually unchanged throughout the life of the engine. None the less, the urgent problem remained to find a light alloy with a low coefficient of thermal expansion for the cylinder, and a material with the requisite physical properties, etc., and with a relatively high coefficient of expansion for the sleeve. For the former the silicon-aluminium alloys appeared to be the most promising; for the latter only the austenitic irons and steels seemed likely to fill the bill, and they were open to the objection that their thermal conductivity was very low, but in view of their small thickness it was hoped that this would not be too serious.

Air-cooled Sleeve-valve Engines

The problem was rendered the more acute because, at that date, there was a particularly strong urge in favour of air-cooled engines for aircraft, which would necessarily involve still wider ranges of working temperature. An experimental air-cooled cylinder of 5½ in. bore was made up using a silicon-aluminium alloy and fitted with a sleeve of austenitic steel; with this combination the difference in thermal expansion was reduced from about 2·6 : 1 as between ordinary aluminium alloys and plain carbon-steel to about 1·3 : 1. Unfortunately the austenitic steel proved very unsatisfactory as a bearing surface. As between the outside of the sleeve and the cylinder bore its behaviour was fairly good, but it did not hit it off with the piston-rings, which were badly scuffed and wire-edged, while both the bore of the sleeve and the piston skirt were soon heavily scored.

Attempts were then made to improve the surface of the bore of the sleeve both by rolling and by shot-blasting in order to work-harden the surface, but these were unavailing, as also an attempt at chromium-plating. At this early date the technique of porous chromium-plating was unknown, while that of nitrogen-hardening was still in its infancy. In order quickly to obtain some data on the problems of air-cooling a sleeve-valve engine, it was decided, purely as a temporary expedient, to employ a cast austenitic-iron sleeve, although the physical properties of austenitic cast-iron at that time were known to be very poor. Preliminary running with this material indicated that it afforded a very satisfactory bearing surface, but when full load was applied the sleeve split from end to end, fortunately without doing any serious damage. A thicker sleeve was then fitted and though too heavy for aircraft use, it otherwise proved very satisfactory.

By this date, about 1927, the octane number of the fuel available for aircraft use had improved very considerably, and it was thought safe to employ a compression ratio of 7·0 : 1. The best results obtained with this 5½-in. bore air-cooled unit were a B.M.E.P. of 142 lb. per sq.

in. and a minimum consumption of 0·39 lb. per B.H.P. hour, both at a speed of 1600 r.p.m., the fuel consumption figure being at the time almost a record achievement for a spark-ignition engine operating on petrol.

That the B.M.E.P. was not higher was due in the main to the higher temperature and therefore the lower volumetric efficiency of the air-cooled cylinder.

As would be expected, the problem of cooling the deeply recessed cylinder head by air alone was a formidable one, and still remains one of the chief limiting factors in the air-cooled sleeve-valve engine. Prior to the design and fitting of the air-cooled cylinder much research had, of course, been carried out in attempts to determine the heat distribution in a sleeve-valve engine by the use of many thermocouples, and later by that of traversing thermocouples to explore temperature gradients, also by measuring separately the heat transferred to the cooling water from the head and from the cylinder barrel. These experiments had indicated:

(1) That the heat flow to the cylinder head was relatively small as compared with a poppet-valve engine, as indeed would be expected since there were no valves or exhaust passages in the head. It was presumably the same as that to the piston, seeing that it was in effect a duplicate of the piston and with practically the same contour and area of exposed surface.

(2) That a moving sleeve, provided that only a thin oil film was maintained, appeared to be almost transparent to heat.

(3) Owing both to the apparent thermal transparency of the sleeve and to its capacity for translating heat geographically up and down the cylinder, it was found that a large part, if not the bulk, of the heat could be transferred from the cylinder head, via the sleeve, to the upper part of the cylinder barrel well above the combustion chamber. By liquid-cooling, separately, the cylinder head and the portion of the cylinder barrel immediately surrounding it, i.e. above the port belt, and by varying the rate of coolant flow between these two circuits, it was possible to evaluate, at least approximately, the transfer of heat from one to the other via the sleeve.

(4) The total flow of heat to the coolant was appreciably less in a sleeve- than in a poppet-valve engine, due to the very much shorter and straighter exhaust passages.

All the above considerations were encouraging from the point of view of the air-cooled cylinder, but though it appeared that a large proportion of the heat from the cylinder head could be transferred to the upper end of the cylinder barrel, and so got rid of by simple external ribbing, much still remained to be disposed of, while the problem of

diverting cooling air down a deeply re-entrant cylinder head was still further aggravated by the necessity, in an aero-engine, of accommodating two sparking-plugs.

On the evidence of the above observations, the light alloy air-cooled cylinder had been designed with the cooling ribs of uniform depth and pitch throughout its whole length, while the cylinder head itself was as well ribbed as the sparking-plugs would allow, and suitable baffles fitted to deflect the cooling air down to the bottom of the head. On the whole, the cooling of this first cylinder appeared to be fairly satisfactory.

About this time the Bristol Aeroplane Company began to take a serious interest in the sleeve-valve development, and since their experience of air-cooling and its problems was extensive and unique, it was decided to hand over further development of the air-cooled version to them. Meanwhile, the search for a suitable material for the sleeve continued, with the active help of the steel manufacturers. It was found that the austenitic-steel sleeve could be nitrogen-hardened, but:

(1) It was almost impossible to avoid some distortion, with the result that the final grinding was liable to break through the very thin hardened surface over part of the area, and that with disastrous results.

(2) The very smooth and very hard surface gave rise to lubrication troubles similar to those which had been experienced in poppet-valve engines with hard chromium-plating, i.e. a failure to wet the surface, with consequent risk of piston seizure.

These difficulties were overcome eventually by:

(1) A process developed by the Bristol Aeroplane Co. for massaging the sleeve into truth after hardening.

(2) By a coarse honing process to break up the very smooth surface, leaving what later came to be termed a " satin " finish.

With these difficulties removed the centrifugally cast nitrogen-hardened austenitic-steel sleeve proved the best solution, and became, and still remains, standard for all air-cooled sleeve-valve engines, the one remaining objection being the very poor thermal conductivity of austenitic steels. With this material and a careful control over manufacturing limits, it proved unnecessary to use a silicon-aluminium alloy for the cylinder.

In so far as the cooling of the cylinder head was concerned, the Bristol Aeroplane Co. developed a system of ribbing and air ducting which proved adequate for power outputs up to about 60 H.P. per litre of cylinder capacity, but for the higher outputs they have developed a composite copper cooled head, fig. 17.19, which has proved very satisfactory.

Although the final design of air-cooled cylinder employed by the Bristol Aeroplane Co. would appear to differ very little from the first experimental version developed in the author's laboratory, yet only those who know from experience will realize, to the full, the enormous amount of detail development work that separates even a successful

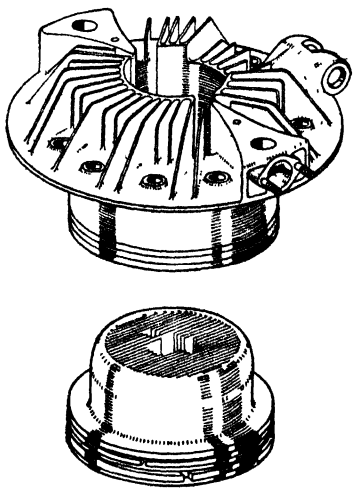

Two-piece aluminium-alloy cylinder head

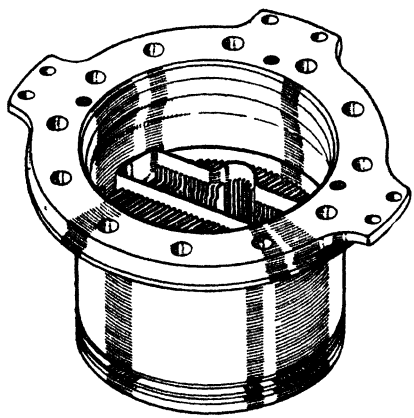

Fabricated copper-steel cylinder head

Fig. 17.19

experimental cylinder from that of a fully developed aero-engine, and the greatest credit is due both to the Bristol Aeroplane Co. for their perseverance and great achievements, and to the Air Ministry for their financial support and encouragement during a time when the purse-strings on Government expenditure were drawn very tight.

Liquid-cooled Sleeve-valve Engines

While the developments just described were taking place, a number of other liquid-cooled experimental single sleeve-valve engines of a wide range of types and sizes were designed and built. These ranged from a small six-cylinder in-line petrol engine for the Vauxhall Co., to a large single-cylinder compression-ignition engine of 12 in. bore, and a large amount of experience was accumulated. Attention was, however, focused on the C.I. rather than the petrol versions, for during the late 1920s, the high-speed C.I. engine was coming rapidly to the fore and, with the relatively low-octane petrol then available, was even running the petrol engine very close in the race for the air. During the years 1927–30, two experimental liquid-cooled sleeve-valve aero-engines were designed, built, and tested in the author's laboratory (see figs. 17.20–17.23). These were 12-cylinder V-type engines, the design

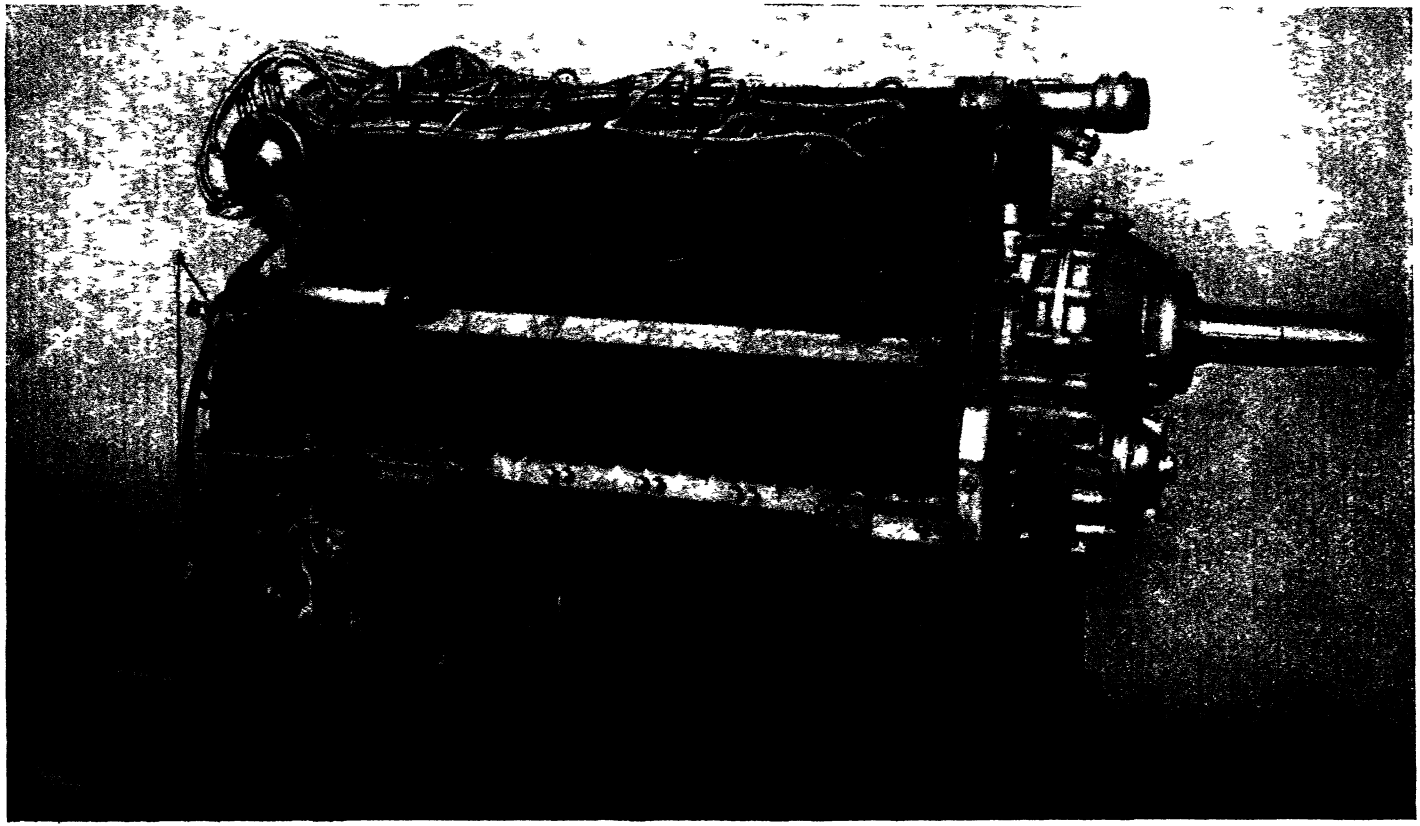

Rolls-Royce photograph

Fig 17 22 —12-cylinder experimental sleeve valve aero engine, petrol version

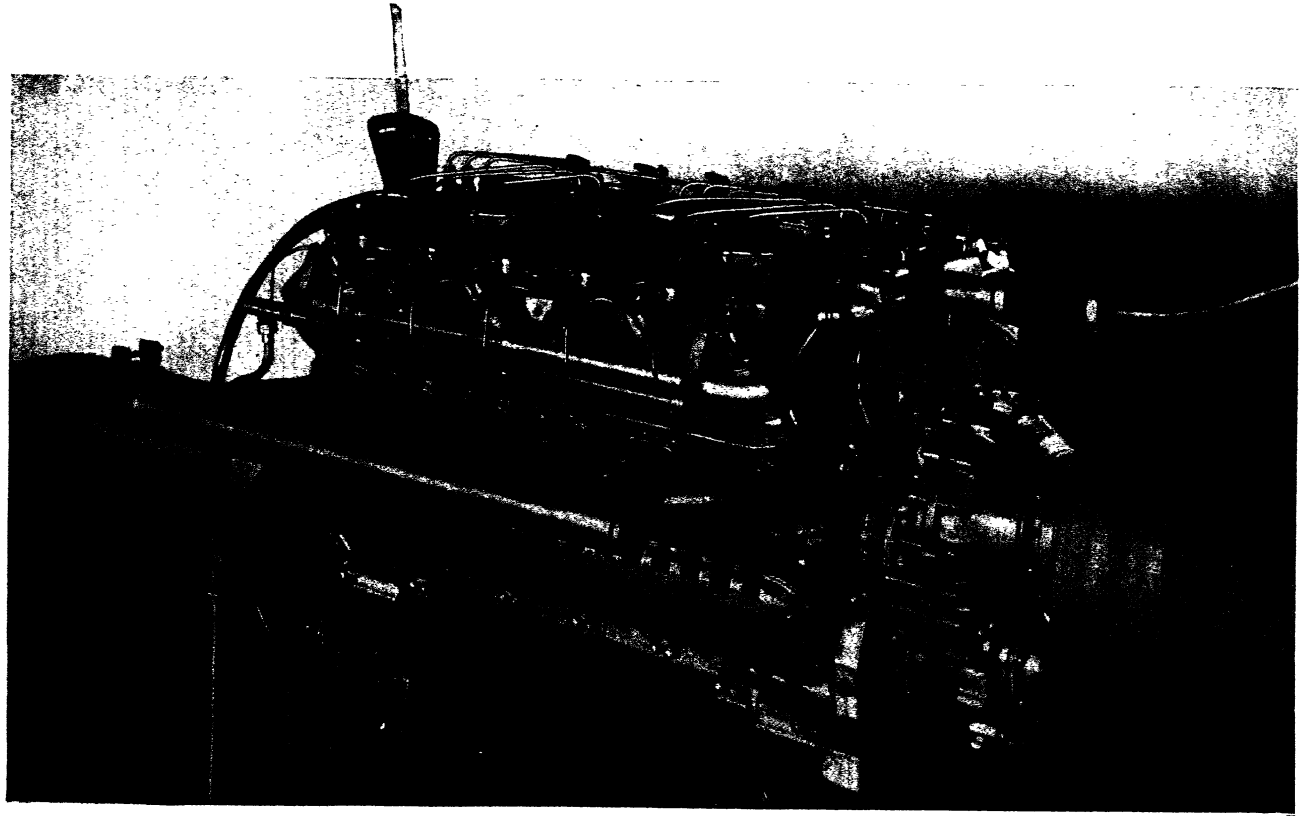

Rolls-Royce photograph

Fig. 17.23.—12-cylinder experimental sleeve-valve aero-engine, C.I. version

being based on the Rolls-Royce "Kestrel" engine, and employing many of the standard parts of that engine, such as the crankshaft, connecting-rods, propeller reduction gear and most of the auxiliaries. The bore and stroke of these engines was 4·75 in. × 5·5 in., with a total cylinder capacity of 19·2 litres. One was built as a C.I. engine with a compression ratio of 15·5 : 1 and the other as a petrol engine with a C.R. of 7·0 : 1, but except for the pistons and cylinder heads, both engines were identical. On test the C.I. version developed a maximum of 340 B.H.P. at 2400 r.p.m. with a dry weight of 720 lb. and a

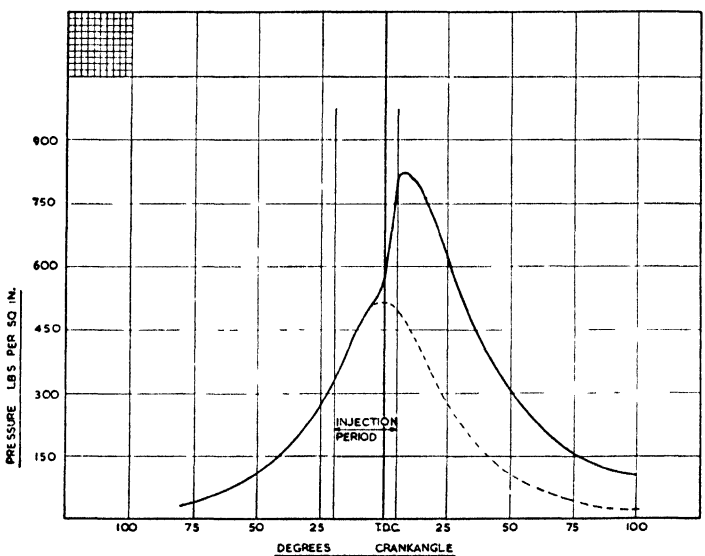

Fig. 17.24.—Typical indicator diagram from 12-cylinder C.I. engine at 2250 r.p.m.

cruising consumption at 1800 r.p.m. of 0·38 lb. per B.H.P. hour, the latter in particular being a rather disappointing achievement, for from experience with other, though larger, sleeve-valve C.I. engines, the author had hoped to better these results by at least 6 or 7 per cent. The maximum cylinder pressure of 820 lb. per sq. in. was found to be too high for the white-metalled bearings of the connecting-rod big-ends which failed from fatigue in less than 50 hours; also cracks developed in the foot of several of the forked connecting-rods. Fig. 17.24 shows a typical indicator diagram from one of the cylinders of this 12-cylinder engine.

It had been intended as a next step to fit a supercharger to this engine, but in view of the high gas pressures and resulting bearing and connecting-rod troubles, this was not proceeded with. In the case of the petrol version, no bearing or connecting-rod trouble was experienced and a centrifugal supercharger was fitted; thus equipped

and with 87 octane petrol, which was then (1929) just becoming available, the engine developed a maximum power output of 700 B.H.P. at 3000 r.p.m. with a minimum cruising consumption of only 0·41 lb. per B.H.P. hour.

Although the C.I. version should have put up a better performance, and doubtless would have done so after further development, yet that of its petrol counterpart was so far in advance that it was not considered worth while to spend any more time on the C.I. version, for the experiment had served to demonstrate that even with petrol of 87 octane, it was possible to obtain double the power output of the C.I. engine, and that with less mechanical distress. Some years later the C.I. version was fitted into a racing-car and, driven by Captain G. E. T. Eyston, put up, and still retains, the world's record for a Diesel-engined car, viz. a speed of 168 m.p.h.

CHAPTER XVIII

Two-stroke Sleeve-valve Engines

The author's excuse for including this chapter which deals with an investigation that unfortunately bore no fruit is that the data and experience gained from it may be of interest, and possibly of use, to others.

Prior to the advent of the gas-turbine, development of the piston aero-engine for military purposes was directed towards the reduction of both frontal area and specific weight; in other words towards the attainment of the maximum possible output from an engine of the smallest possible frontal area and, with this objective in view, close attention was given to the possibilities of the two-stroke engine.

In the chapter dealing with two-stroke engines in general, the author has pointed out that since the blower work required to empty and recharge the cylinder increases as the cube of the speed, such engines show to best advantage when operated at relatively low speeds, but like all such generalizations, there are certain qualifications to be taken into account, e.g.:

(1) If by any means the port area provided can be so large and the phasing such that the blower work required is small in any case, then even though it increases as the cube of the speed, it may still be relatively small even at high speeds.

(2) If use can be made of the exhaust in a turbine then much or all, or in some cases even more than all, of the blower work can be recovered from surplus exhaust energy.

Again, the two-stroke, unlike the four-stroke, does not object to the imposition of exhaust back pressure since this does not involve either negative work on the piston nor any appreciable increase in heat flow to the cylinder walls or pistons; it is, in fact, the normal method of supercharging a two-stroke engine. Yet again, owing to dilution by excess scavenging air, the temperature of the exhaust is reduced to a figure acceptable to a turbine and its mass flow increased by some 50 per cent. As compared therefore with a four-stroke engine the two-stroke is far more suitable to work in conjunction with an exhaust turbine.

Although the two-stroke requires some 50 per cent more air than a four-stroke of equal power, yet the pressure at which that air need be

supplied is considerably lower than in the case of a four-stroke supercharged to the same power output. Since the centrifugal blowers in use in aircraft could handle easily very large volumes of air but were not so suitable for high pressures, this was an important advantage.

All the above were cogent arguments in favour of the two-stroke engine for aircraft, and justified a very full and comprehensive research into the possibilities of this type.

In the late 1920s when the research on the two-stroke engine for aircraft was started, the performance of the spark-ignition engine was handicapped severely by the low octane number of the petrol then available, and the appeal of compression ignition with its lower fuel consumption, its freedom from electric ignition and its reduced fire risk was attractive.

There was also the problem of control to be considered. Unlike the four-stroke the two-stroke cannot, of course, be throttled; any reduction of the air supply by throttling means merely the retention in the cylinder of a corresponding increase in residual exhaust products.

In the case of a C.I. version, control can be on the fuel supply alone, but in that of a spark-ignition engine it would clearly be necessary to rely upon some measure of stratification to maintain regular and economical running on reduced loads. In either case, it was obvious that the fuel must be supplied by injection direct into the cylinder, for it was clearly out of the question to scavenge with an externally carburetted mixture.

By that date considerable experience had been gained in the author's laboratory with both the sleeve valve as a mechanism and with compression ignition as an operating cycle, and a highly efficient four-cycle sleeve-valve C.I. engine had already been fully developed. It was decided, therefore, to start the research on the high-duty two-stroke, as a sleeve-valve compression-ignition engine, embodying the combustion system already developed for the four-stroke version, and making full use of all the experience available as to the behaviour of sleeve valves.

In the two-stroke version the sleeve is, of course, operated at crankshaft speed, and so could be operated directly from an eccentric on the crankshaft. Again, in the two-stroke version only the reciprocating movement of the sleeve is required for port operation, but a certain, though small, amount of rotation is quite essential for lubrication; this was provided for by introducing a swinging link as a fulcrum between the eccentric and the ball socket. Thus the path of the sleeve was that of an ellipse with its major axis vertical and equal to the stroke of the eccentric, while the minor axis could be varied by varying the position of the fulcrum point (see fig. 18.1). It was found, in practice, that satisfactory spreading of the oil and of lubrication generally was achieved so long as the minor axis of the ellipse was not less than 20 per cent of the major.

The first experimental unit to be built on these lines had a bore of $5\frac{1}{2}$ in. and a stroke of 7 in., these dimensions having been chosen to match with a four-stroke sleeve-valve unit which had already been very fully calibrated both as a C.I. and as a spark-ignition engine.

In the two-stroke version air was admitted through a complete ring of ports placed low down in the sleeve and uncovered by the piston

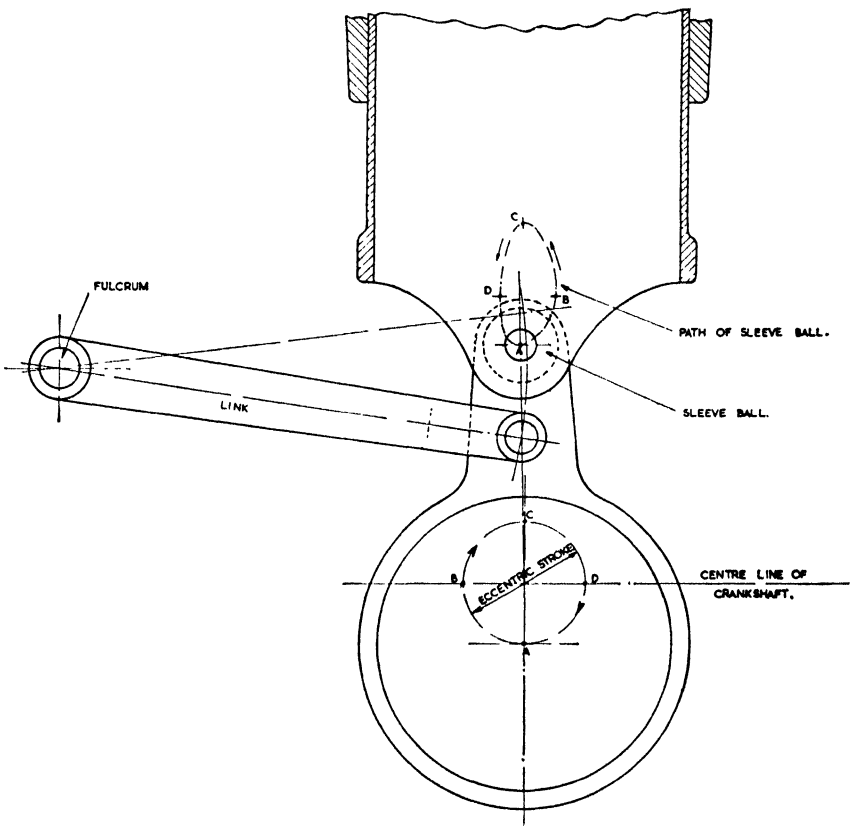

Fig. 18.1.—Diagram showing sleeve operation of experimental two-cycle engine

near the bottom of its stroke. Exhaust was through another complete ring of ports near the top end of the sleeve and controlled by the junk head and head-rings. Both sleeve and piston were nearly in the same phase, but the former had an angular lead which could be adjusted by rotating the eccentric on the crankshaft. Thus end-to-end scavenging was provided, the exhaust being controlled by the sleeve alone and the inlet by the piston, while the phase relation between the opening of the ports could be varied to any extent by varying the lead on the sleeve.

An analysis of the geometry of the mechanism had shown that the most favourable relationship between piston stroke and sleeve stroke was attained when the latter was 30 per cent of the former. Any longer sleeve stroke would provide a greater exhaust port area but a reduced inlet, and vice versa.

In the conventional form of two-stroke engine, the effective length of the piston must be somewhat greater than the stroke, in order that the ports shall not be exposed to the crankcase. In the sleeve-valve version, since the sleeve is moving very nearly in phase with the piston, the effective length of the latter need be equal only to the piston stroke less the sleeve stroke, thus its length need be only about 70 per cent of the piston stroke. This, from a mechanical point of view, as also from that of compactness generally, is a very important advantage.

In the first instance the junk head and combustion chamber were made identical with that of the four-stroke and the degree of air-swirl was controlled by a set of movable guide vanes fitted in the inlet belt and closely surrounding the sleeve. Air under pressure, for scavenging the two-stroke and for supercharging the four-stroke, was supplied from a separate source and metered by means of an Alcock viscous-flow meter.

From the first start, the unit gave a fairly good performance; with a scavenge air supply of 1·3 swept volumes at N.T.P., a gross brake mean pressure of (100 × 2) lb. per sq. in. could be reached with a clean exhaust, with a minimum fuel consumption of 0·37 lb. per B.H.P. hour. This compared with 116 lb. per sq. in. (unsupercharged) and a minimum fuel consumption of 0·355 lb. per B.H.P. hour for the four-stroke at the same r.p.m., the same overall compression ratio and the same intake air temperature.

As was to be expected a number of mechanical troubles soon appeared, chief of these were:

(1) The cylinder head-rings gummed up very quickly.

(2) The piston temperature was much too high, leading to stuck or packed out piston-rings, etc.

(3) Oil on the outside of the sleeve would not pass across the complete gap in the cylinder wall formed by the inlet belt.

(4) The gudgeon-pin bearings in both the piston and connecting-rod wore very rapidly.

Of these the first was by far the most serious. Trouble with the piston and gudgeon-pin was overcome in the first instance by substituting a ball and socket joint with a spherical-ended connecting-rod in place of the more conventional gudgeon-pin attachment, and by cooling the piston with a flow of oil carried both up and down the connecting-rod and circulating at high velocity immediately under the crown of the piston (see fig. 18.2).

Trouble with the lubrication of the outside of the sleeve was over-

come by providing a small spot-feed lubricator feeding oil to an annular groove in the cylinder barrel above the inlet belt. It was somewhat surprising to find how very minute a quantity of oil was required to keep the sleeve adequately lubricated. The major problem, however, was that with the head-rings, for these would become gummed up solid after only a very few hours at full load. In a two-stroke sleeve-valve engine the cylinder head-rings are subject to the same conditions as the piston-rings of a two-stroke engine with piston-controlled exhaust ports, that is to say, they are subject both to the severe scouring action of the hot high-pressure exhaust over the edge of the piston or

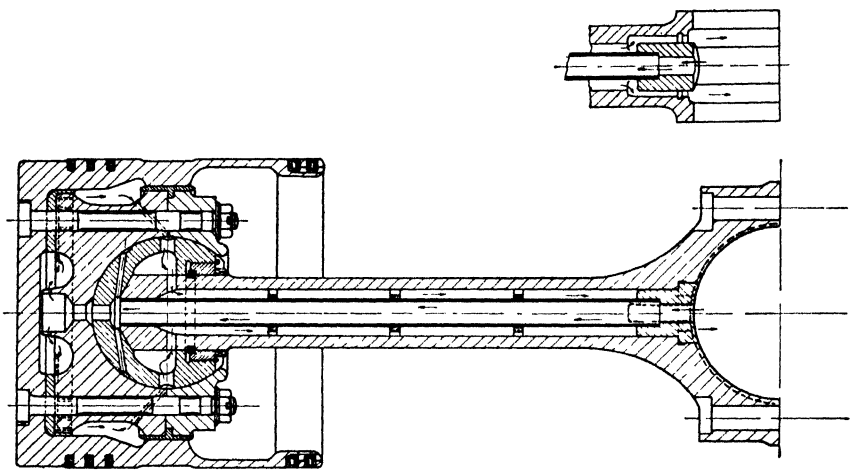

Fig. 18.2.—Piston and connecting-rod with spherical bearing

head, and they are subject also to the accumulation of partially carbonized oil scraped off from the edges of the exhaust ports. They are in worse case still in that they have not the tilting movement of the piston to keep them active. It had been hoped, however, that with the advantage of direct water circulation around the back of the ring grooves, these objections would be more than offset by the very excellent cooling which could be provided and that, on balance, their conditions would be more favourable than those on the piston of an ordinary port-exhausting two-stroke, but this hope was not realized. After several years of fruitless endeavour, during which almost every conceivable type of ring or combination of rings had been tried, it was decided to embark on the bold experiment of eliminating the junk head and the head-rings altogether, and of exhausting over the top of the sleeve, thus relying on the fit of the sleeve alone to ensure gas tightness.

To this end a new cylinder, cylinder head, and sleeve were constructed. In this the thickness of the steel sleeve was 0·125 in. but at

the upper end, beyond the travel of the piston, the bore of the sleeve was enlarged and tapered out to a knife-edge in order to form, in effect, an obturator ring; the intention being that it would expand under pressure to form a gas-tight seal. This proved surprisingly successful and, for the first time, it became possible to carry out a 50-hour full-load endurance test, and that without any depreciation in performance, while inspection of the sleeve after such a test showed perfect bearing and a high polish over a length of about 0·5 in. downwards from the top of the sleeve. Later, however, it was found that the thinned-down top was far too fragile and that, even with the greatest care in handling, was liable to be damaged when assembling the sleeve and cylinder, and once dented or distorted it would fail to seal and would burn away. Other sleeves were tried with the thinning-down reduced, with successful results, until eventually it was found, to the surprise of all concerned, that not only was there no need to thin the sleeve at all, but even quite a wide range of tolerance in the sleeve-to-cylinder fit had no ill effect except upon starting up from cold, and even this presented no insuperable difficulty if, before starting, a little thick lubricating oil was injected into the annular space immediately above the sleeve.

From simple arithmetic it was obvious that the gas pressure alone could not inflate the sleeve sufficiently to take up all the clearance and ensure a gas-tight seal. It appeared therefore that the necessary inflation was brought about by thermal expansion rather than pressure, and later a series of experiments with fusible strips " soldered " to the inside of the sleeve above the travel of the piston showed that this was indeed the case for, with every increment of sleeve-to-cylinder clearance, the temperature of the top end of the sleeve rose in like proportion, while equating the observed temperature with the known thermal expansion and the known cold clearance showed very fair agreement. Further experiments revealed that the working clearance could be increased to as much as 0·008 in. to 0·010 in. in diameter before the sleeve failed to seal; under such extreme conditions, however, cold-starting on a C.I. engine became impossible. In the limit, failure from excessive working clearance would reveal itself by the development of minute cracks in the extreme top edge of the sleeve due no doubt to excessive temperature stresses; these would lead to leakage followed by burning away of the top edge. It appeared that the top end of the sleeve expanded out to a trumpet shape, until all clearance was taken up, when heat transfer to the cylinder walls then stabilized the temperature conditions; since the heat capacity of the sleeve was extremely small and the intensity of heat flow, more especially while leakage was taking place, very great, stabilized conditions were reached after only a few cycles. It was both surprising and encouraging to find that the permissible range of clearance was well within the usual limits of

manufacturing tolerance and of reasonable wear. The author has dealt at some length with this question of the evolution of the open-ended sleeve, because it is an example of a very dubious expedient, tried only in desperation and as a last resort, which turned out to be a success, though not quite in the manner that had first been anticipated.

In addition to eliminating the head-rings and therefore the chief source of trouble, the open-ended sleeve conferred the further advantages:

(1) It allowed of a considerable reduction in the overall height of the cylinder and head and therefore of the frontal area of an aero-engine.

(2) It allowed of the whole of the circumference of the sleeve being available for exhaust-port area instead of 80 per cent which was found to be the maximum permissible when a ported sleeve was employed.

(3) Since the sleeve valve was operating very nearly in phase with the piston and since its open end was subject to the full gas pressure in the cylinder, it formed, in effect, an annular piston which contributed slightly to the power output. In practice the area of this annulus was about 10 per cent that of the piston and since its stroke was 30 per cent it therefore contributed about 3 per cent to the indicated power of the engine which was transmitted via the eccentric to the crankshaft—a small but useful contribution.

The first experimental unit had a cast-iron cylinder and carbon-steel sleeve, thus the coefficient of thermal expansion was about the same for both. The next step was to see how the open-ended steel sleeve would behave when working directly in an aluminium cylinder, for the large tolerances found possible in the first unit suggested that, despite the much greater thermal expansion of the aluminium, it might still be possible to maintain a good seal. A new unit was therefore designed and built having a piston diameter of 4·81 in. and a stroke of 5·5 in. to correspond with another four-cycle sleeve-valve unit then under development for aircraft use (see fig. 18.3). Both units were designed to run at speeds of up to 2500 r.p.m. The combination of an open-ended carbon-steel sleeve in an aluminium cylinder proved on the whole satisfactory, but it was found that if sufficient clearance was provided to allow of free movement at −15° C., it became near the limit at a coolant temperature of 100° C., thus leaving very little margin for manufacturing tolerance and wear, and the rate of wear of the upper end of the soft carbon-steel sleeves used for experimental work was fairly rapid.

This limitation was later overcome as in the air-cooled four-cycle sleeve-valve engines by the use of a nitrogen-hardened austenitic-steel sleeve whose coefficient of expansion was about 50 per cent greater than that of carbon-steel and whose hard nitrided surface was almost immune from wear. For this unit, in order the more readily to be able to change both the phase relation and the stroke of the sleeve,

the latter was operated from an overhung crank as in the four-cycle units, gear-driven from the crankshaft. This served well for a purely experimental unit, but since about 3 per cent of the total power was delivered by the sleeve, it was found necessary to provide extremely substantial gears, and, as might be expected, these were somewhat noisy. The spherical-ended connecting-rod which had proved so satisfactory in the larger and slower-running unit was not altogether successful in the new version, for there was a tendency to " pick up " and several partial seizures of the ball and socket joint occurred. It was changed therefore for a conventional type of gudgeon-pin but with a needle roller bearing. At the same time the oil circulation through the piston was improved and, instead of returning down the rod, was discharged directly from the lower end of the piston. After these modifications, the unit gave very encouraging results and, by dint of many minor changes both in the porting and in the proportions of the combustion chamber, etc., the performance was stepped up progressively until ultimately a gross brake mean pressure of (124 × 2) lb. per sq. in. was reached with a clean exhaust at 2400 r.p.m. when running with a scavenge pressure of 9 lb. per sq. in., a scavenge ratio of 1·3 swept volumes reckoned at N.T.P. and with exhaust discharging against atmospheric pressure. This corresponds to a gross output of 47 H.P. per litre of swept volume, a very satisfactory performance for any engine operating on compression ignition.

In a two-cycle engine the fuel injection pump is, of course, operated at crankshaft speed and at these high speeds trouble was experienced due to:

(1) Surging in the fuel supply pipe—this was overcome in the first instance by the fitting of a small air vessel on the suction side of the pump.

(2) " Gassing " in the fuel system due to the violent commotion set up when the spill port is opened to suction towards the end of the delivery period. This was overcome in the first instance by separating the suction and spill ports.

Both troubles were later overcome by maintaining a continuous circulation of fuel under a slight pressure through the injection pump and by employing an efficient de-aerator in the circulating system.

Throughout all this investigation the air for scavenging was supplied from an independent source but its temperature was maintained at that which would correspond to an adiabatic efficiency of the blower of 75 per cent. No attempt was made to supercharge the cylinder by imposing exhaust back pressure, though this would have been the next step.

In parallel with the engine tests other experiments were carried out on a scavenging test rig using a glass cylinder and both a static and later a moving piston with:

(1) Pith balls and silk threads to indicate the direction of movement of the scavenge air and the effect of swirl.

(2) The admission of smoke and the recording of its movement by means of a high-speed camera.

(3) The use of CO_2 and air to determine the efficiency of scavenging by chemical analysis of the residual gases.

(4) The use of Freon and air in place of CO_2 to represent the relative densities of the residual exhaust gases and the scavenging medium.

These provided some very useful data but they revealed also that the high intensity of air-swirl needed for efficient combustion in a C.I. engine with a single-orifice injector was detrimental to scavenging in that the swirling inlet air tended to spiral up the wall of the cylinder leaving, undisturbed, a central core of residual exhaust products. Thus it appeared that the greater the intensity of air-swirl, the lower the efficiency of the scavenging process.

Attention was next directed to the development of a form of combustion chamber which could function efficiently with a lower rate of air-swirl. The form first used was that of a cylindrical pot which had been developed for the four-stroke sleeve-valve C.I. engine; this was known to give a very high efficiency but required a swirl ratio of 9 or 10 : 1. Eventually a modified form known as the "lipped-vortex" type (see fig. 18.4) was arrived at, which gave a nearly equal performance at a lower, though still rather high, swirl ratio, viz. about 6–7 : 1; with this the air utilization was about equal to that of the pot head at the higher swirl ratio, but the combustion efficiency was slightly inferior. The net result of the change to the "lipped-vortex" type of head was a gain of about 10 per cent in power due to more efficient scavenging but at a cost of about 3 per cent in specific fuel consumption.

The objective of all this investigation was, of course, the development of a high-duty C.I. engine for aircraft, but progress had been slow, petrol was improving, and by about 1937 the war clouds were gathering fast; it was decided, therefore, to wind up all research on the C.I. engine for aircraft, either two- or four-stroke, on the grounds that, at best, it was a long-term development and that, in any case, it would require some more outstanding advantage in favour of the C.I. than could be foreseen to justify the supply, in war-time, of two widely different fuels for aircraft.

It was decided, however, to cash in on the experience that had been gained with the two-stroke C.I. engine, at all events from a mechanical point of view, and develop instead, as a relatively short-term policy, a two-stroke petrol engine with fuel injection and spark ignition.

By this time it was anticipated that 100 octane fuel would be available in sufficient quantity to meet the needs of military aircraft.

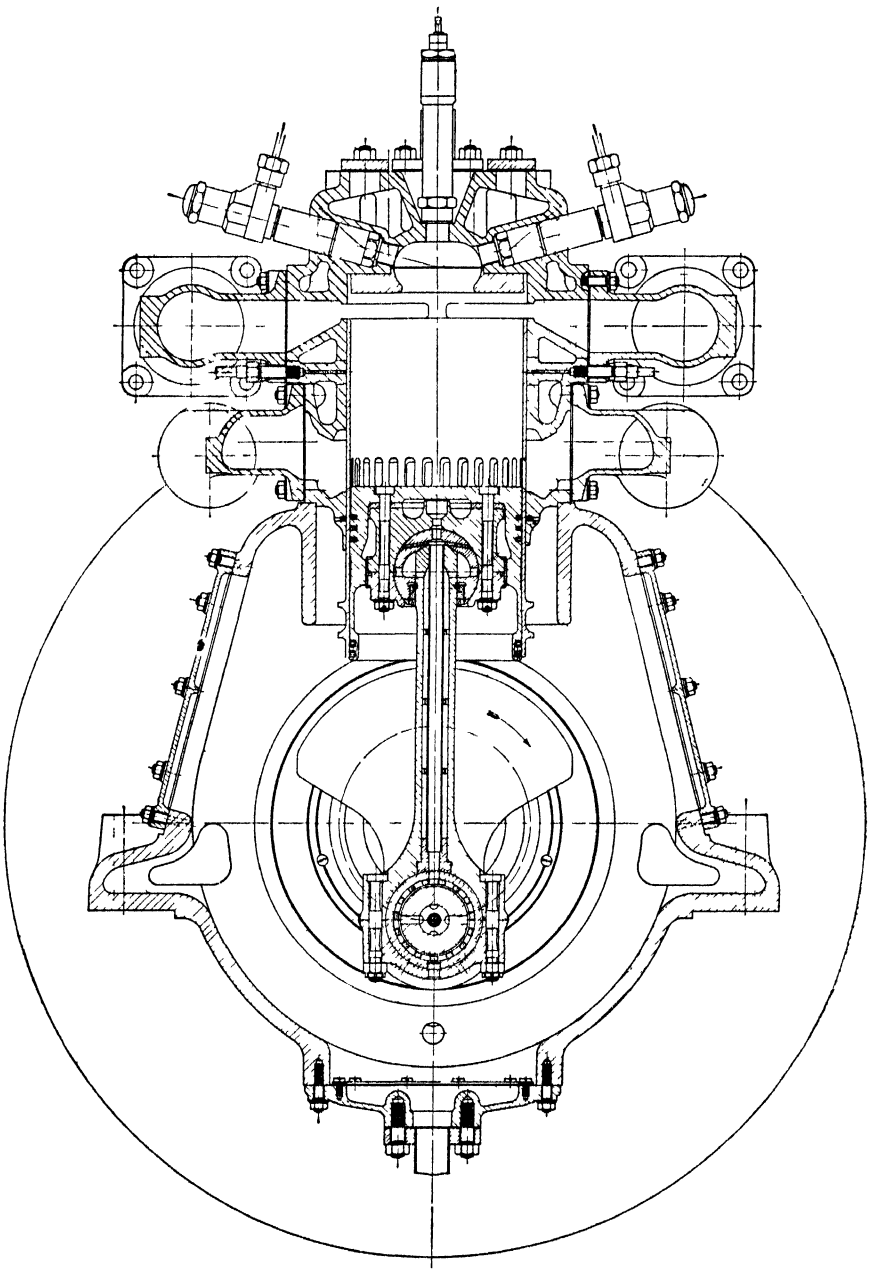

Fig. 18.4.—The high-speed two-stroke compression-ignition engine of fig. 18.3 but with open-ended sleeve and lipped-vortex combustion chamber

With the help of this fuel and with all the experience that had been gained on the mechanical side of the problem, it seemed that it might be possible, even as a relatively short-term project, to develop an engine which, for the same frontal area and weight, would develop a very much higher power output than could be hoped for from a corresponding four-stroke engine.

As compared with a C.I. the power output should be much greater because:

(1) The whole instead of only about 75–80 per cent of the oxygen retained in the cylinder could be utilized.

(2) With spark ignition, little or no air-swirl would be required, hence the efficiency of scavenging should be greater, thus reducing substantially the blower work.

(3) With 100 octane fuel, it should be possible to work with a high compression ratio and thus realize nearly the same thermal efficiency as the C.I. version.

It was realized from the outset that three versions of the engine could be developed:

(1) A simple and very compact engine for very high-speed machines exhausting against atmospheric pressure and making reasonably efficient use of the energy in the exhaust for direct jet propulsion.

(2) A compound version exhausting against back pressure into a turbine which, in turn, would be geared back to the engine crankshaft.

(3) A much higher-pressure version in which the bulk or even the whole of the power take-off would be derived from the turbine, the piston engine serving, in this extreme case, merely as a gas generator. For this latter purpose which would call for a considerable excess of air in any case, the C.I. version would clearly be much more suitable.

It was decided to concentrate at once on the two former versions and to regard the third, for the time being, as a long-range project. The first major problem that had to be surmounted was clearly that of control. In the case of the C.I. this presented no difficulty at all, since the output of the engine could be controlled entirely by the quantity of fuel injected per cycle, but when working with spark ignition the ratio of fuel to air had to be maintained within the limits set by the range of burning.

In a two-cycle engine the cylinder is always full and throttling the air supply has the effect merely of retaining a greater proportion of residual exhaust gases, whose presence tends still further to narrow down the range of burning; hence other means had to be found for controlling the power output.

Two alternative schemes were tried:

(1) Injection of the fuel near the end of compression and just ahead of the passage of the spark, as in the Hesselmann engine.

(2) The use of a stratified charge in which the mixture immediately

in the zone of the sparking-plug is very much richer than that in the main body of the combustion space.

The former proved thoroughly unsatisfactory in that without a very high intensity of air-swirl it was found impossible to make full use of the air retained in the cylinder, in fact it was found to be subject to most of the limitations of the C.I. version without its advantages.

The second proved a much more effective, though in some ways a more difficult solution.

Long experience with petrol injection in four-cycle engines had brought home to the author the need for very thorough mixing of the fuel and air before ignition and this, in a four-cycle engine, could be achieved only by injecting the fuel during the suction stroke of the engine while the air was still entering at a high velocity and even so, to get the best results, it was necessary to direct the jets of fuel to meet and be distributed by the air entering through the inlet valve or valves.

In the two-stroke engine in question, the injector was placed vertically in the head of the cylinder and the jet, from a pintle-type injector, was in the form of a hollow cone, of such an angle that the curtain of spray was timed and directed to meet the air as it entered through the inlet ports in the sleeve valve (see fig. 18.5). This arrangement of injection gave very thorough mixing, and ensured the utilization of the whole of the oxygen retained in the cylinder but, in itself, it did not afford any means of control, beyond that of the normal range of mixture strength. In order to provide this, a bulb was formed in the cylinder head into which the sparking-plugs were fitted; this was separated from the main combustion space by a restricted neck, though wide enough not to interfere with the main injection stream; into this bulb additional fuel was injected after the end of the normal injection period, in order to provide, locally, a mixture sufficiently rich to be ignited by the sparking-plugs, even though that in the main body of the chamber was far too weak for ignition from a spark, though not too weak for ignition by a flame issuing from the bulb.

The secondary injection necessary to carburet the air in the bulb was brought about in a very simple manner. In the C.I. engine every effort is made to avoid any dribbling of the injector after the normal injection period is over and, to this end, the residual pressure in the pipeline between the injector and the pump is relieved as rapidly as possible by the introduction of a draw-back valve—a combination of poppet and piston valve—the displacement of which is determined by the depth of the piston component. It had been noted in the course of injection experiments on C.I. engines that, when using a pintle injector and if the displacement of the draw-back valve was insufficient, the residual pressure in the pipeline would be relieved by the discharge through the injector of a coarse low-pressure spray at an angle very

much wider than normal. All that was necessary therefore to provide a secondary injection into the bulb, was to reduce or eliminate the piston portion of the standard draw-back valve.

The quantity delivered during this secondary injection could thus be controlled either by varying the displacement of the piston portion of the valve or by the capacity and resilience of the pipeline, or both.

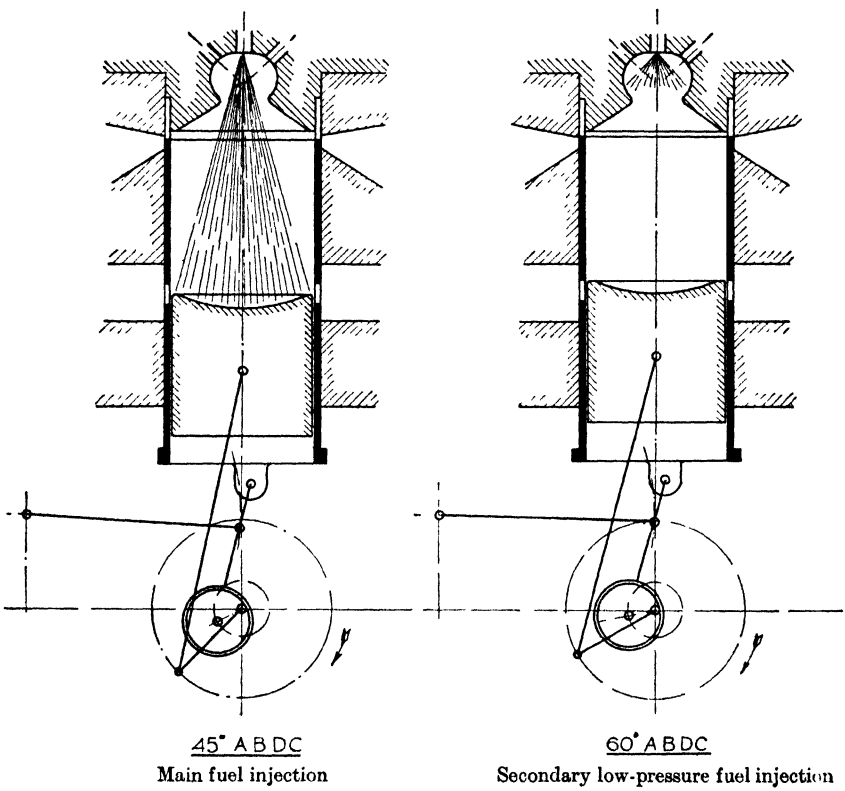

Fig. 18.5.—Diagrams to show two injection phases

As would be expected much time was devoted to finding the most suitable proportions of the bulb and of the quantity of fuel required for the secondary injection, but, these being all dimensional problems, once found they provided a permanent solution. In the final solution the capacity of the bulb was 20 per cent that of the total clearance volume. The objective was that, at idling speeds, the secondary injection would deliver into the bulb all the fuel needed, while at full power the whole of the air retained in the cylinder would be carburetted by the primary injection, with the mixture in the bulb still not too rich for rapid ignition. Thus when the whole of the air was carburetted,

the mean mixture strength of the cylinder content as a whole was somewhat in excess of the chemically correct value, but at reduced loads the mean mixture strength was far below this and much below that which could normally have been ignited from a spark; thus, as in the C.I. version, control was on the delivery of fuel alone.

As in previous attempts to make use of a stratified charge in four-cycle engines by the provision of a separate bulb, it was found impossible to cover completely the full range from idling to maximum power and there remained a condition when the mixture in the main combustion space was too weak to be ignited, or at least to burn with sufficient rapidity even by the flame issuing from the bulb. When idling or at very light loads, combustion took place in the bulb alone. From about 35–40 per cent of full-load torque and upwards, combustion took place both in the bulb and in the main portion of the combustion space, but there remained a gap between about 15 and 40 per cent full torque where ignition was irregular and uncertain. Thus the engine would idle with perfect regularity and very economically, and the same applied at any load from about 40 per cent upwards, but between these limits lay a phase of unstable running when ignition was irregular with a tendency to four-stroke. As applied to aircraft this was of little consequence, since an aero-engine is seldom or never called upon to run continuously in that unstable zone, but for other applications it would remain a serious objection.

Attention was concentrated first on the simple version for fighter aircraft; it was estimated that at speeds in the region 450–500 m.p.h. the thrust due to exhaust jet reaction would be equivalent to the recovery of about two-thirds of the power expended in compressing the scavenging air, while in the supercharged version for long range and higher power, the return from the turbine would be more than the power expended in scavenging and supercharging the engine. In the former case therefore the aim was to get the maximum possible thermal efficiency from the piston engine and at the same time to economize as far as possible on the blower work; in the latter it paid, on balance, to be extravagant of air in order to get more useful work out of the turbine. Again, in the former case it paid to get as much supercharge as possible by closing the exhaust well in advance of the inlet ports; in the latter the aim was to get the maximum possible blow-through area and to achieve the supercharge by the imposition of back pressure on the exhaust. Thus two different relationships of port and port timing were required. The former a somewhat narrow timing, to provide as long an effective expansion stroke as possible, and the latter a wider one giving a much increased blow-through area, even at the expense of curtailing a little more of the expansion stroke. Fig. 18.6 shows the timings and port-opening areas finally arrived at for the two conditions of operation.

The influence of various port timings and areas on air-flow, supercharge, scavenging efficiency, etc., had already been explored in relation to C.I. operation but always with a fairly high swirl ratio; consequently this investigation had to be repeated in terms of no air-swirl. With the swirl eliminated a considerably higher scavenging efficiency was achieved, so much so in fact that little, if anything, was to be

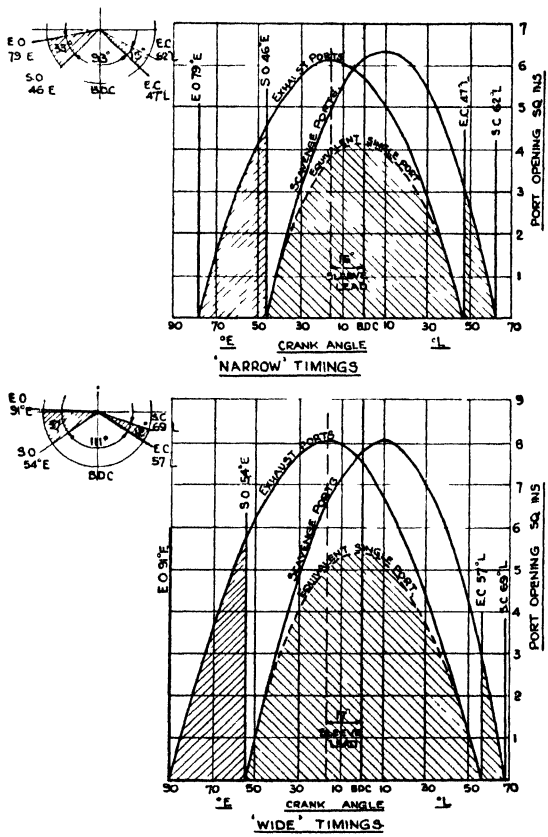

Fig 18 6 —Port-area diagrams for " wide " and " narrow " timings

gained by offering to the cylinder more than 1·2 swept volumes of air reckoned at intake temperature and pressure—see fig. 18.7 which shows the relationship found between air intake volumes and indicated mean effective pressure when varying the area of the scavenge ports in the sleeve valve:

(*a*) When working with a scavenge pressure of 9 lb. per sq. in. and exhausting to atmosphere.

(*b*) When working with a scavenge pressure of 13 lb. per sq. in. and exhausting against a back pressure of 4 lb. per sq. in.

Fig. 18.8 shows the effect on B.M.E.P., air and fuel consumption of a number of different port timings and areas. In this figure the air consumption is expressed in terms of N.T.P. rather than actual intake pressure and temperature.

Fig. 18.9 shows the effect on air consumption, B.M.E.P. and fuel consumption of varying the width and therefore the area of the scavenge ports in the sleeve without altering the height and therefore the timing.

In order to eliminate the effects of any surging in the exhaust or air inlet systems and, at the same time, to avoid any ramming effects, large canisters, each of a capacity of about 70 cylinder volumes, were fitted close up against the air inlet ports and a large expansion chamber as close as possible to the exhaust.

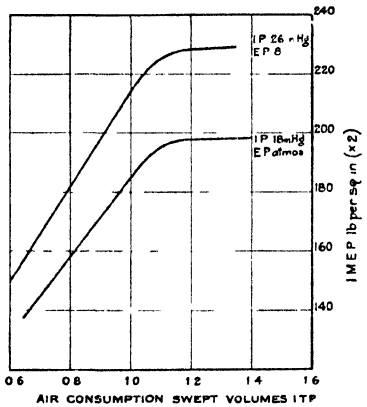

Fig. 18.7.—Relationship between air consumption and I.M.E.P. with and without exhaust back pressure.

For prolonged or endurance test purposes a normal running speed of 2750–2800 r.p.m. was generally chosen, for, above this speed, the

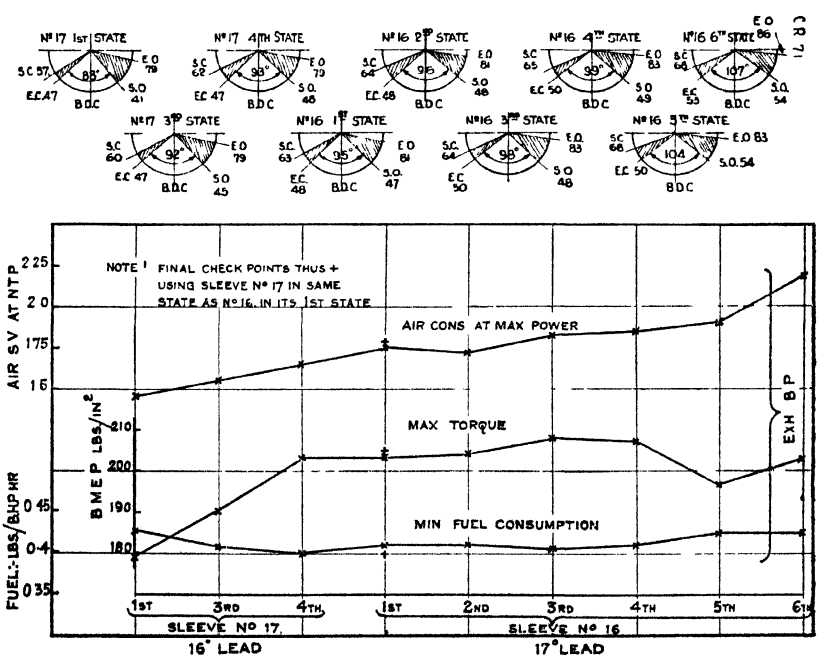

Fig. 18.8.—Effect of various port timings on power, fuel and air consumption

vibration of the single-cylinder unit led to constant trouble with the test equipment. Towards the end of the research the units were equipped with both primary and secondary balancers which eliminated completely all trouble from vibration and the tests were then extended to much higher speeds.

The first actual running tests were commenced towards the end of 1938 using, for the purpose, a new but slightly modified version of the

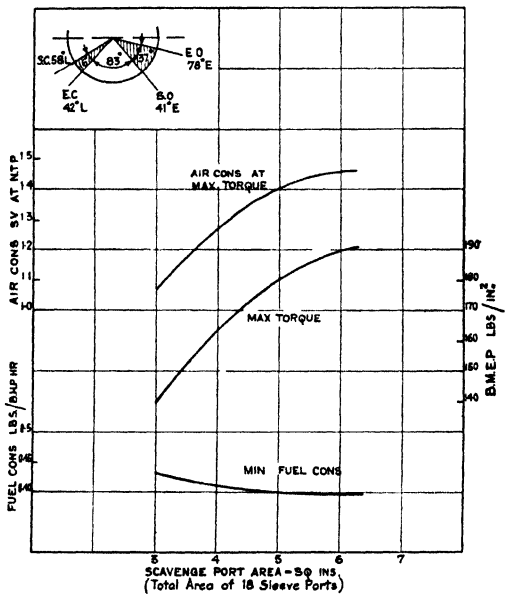

Fig. 18.9.—Effect of varying area of scavenge ports by increasing width of ports alone

Test conditions:

Engine speed, 2750 r.p.m.	Fuel, 100 octane number, S.G. 0·71 at 15° C.
I.P., 26 in. Hg.; E.P., 8 in. Hg.;	Oil, D.T.D. 109.
I.T., 55° C.	Oil and water inlet temperature, 70° C.

Note: Port area varied by increasing width of sleeve ports

C.I. unit with a " narrow " porting as shown in fig. 18.6 and exhausting against atmospheric pressure. After a considerable amount of preliminary work in the way of arriving at the proportions of the combustion chamber, timing, and rate of fuel injection, etc., a very good performance was obtained. With 100 octane fuel the limiting compression ratio as set by the incidence of detonation was found to be 8·4 : 1. At this high ratio, a gross fuel consumption as low as 0·375 lb. per B.H.P. hour was actually attained and maintained over a wide range of torque, as shown by the consumption loop, fig. 18.10. This was, in fact, almost equal to the best attained by the C.I. version at a C.R. of 16·0 : 1 and at the same scavenge air temperature and pressure, while the B.M.E.P.

was some 50 lb. per sq. in. greater. Although a compression ratio of 8·4 : 1 was found to be possible with standard 100 octane, most of the subsequent test running was carried out at a ratio of 7·0 : 1 in order to be quite clear of detonation under any reasonable circumstances. The change from 8·4 : 1 to 7·0 : 1 increased the specific fuel consumption with the narrow timing from 0·375 to just over 0·4 lb. per gross B.H.P. hour. As would be expected, it was found necessary to carry out the whole, or very nearly the whole, of the primary fuel injection during the period that air was flowing through the inlet ports. If the injection were retarded beyond the closing of the inlet ports, incom-

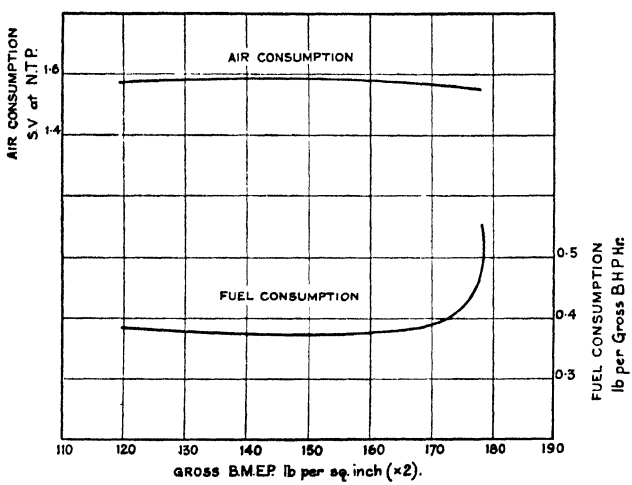

Fig. 18.10.—Fuel and air consumption curves, narrow timing

plete mixture revealed itself by a drop in mean pressure accompanied by the presence of black smoke in the exhaust, even though the mean mixture strength was quite weak. It was obvious, on the other hand, that if the injection started too early during the scavenging period, some fuel would be carried out through the exhaust ports. To obviate this a fairly high rate and short period of injection was employed and the scroll on the ordinary C.I. injection pump reversed in order to give a variable start but fixed end to the time of injection. Even so, at full load it is probable that some small portion of the fuel may have been carried through to exhaust by the blow-through scavenge air but, at anything less than full load, the loss was negligible, as shown indeed by the high thermal efficiency achieved. Fig. 18.11 shows the effect of varying the time of finish of main injection on the B.M.E.P. and fuel consumption, in this case at a compression ratio of 7·0 : 1. After some further minor modifications a gross B.M.E.P. of (190 × 2) lb. per sq. in. at 2750 r.p.m. was eventually reached with the " narrow " timing

and atmospheric exhaust. It was found, however, that this B.M.E.P. could be maintained up to 3500 r.p.m. with the same specific air consumption, so long as the scavenge air pressure was increased as the square of the speed. During the years 1939–41 several endurance runs of 50 hours each were carried out at a continuous B.M.E.P. of (180 × 2) lb. per sq. in. and 2750 r.p.m. without any mechanical trouble or depreciation in performance.

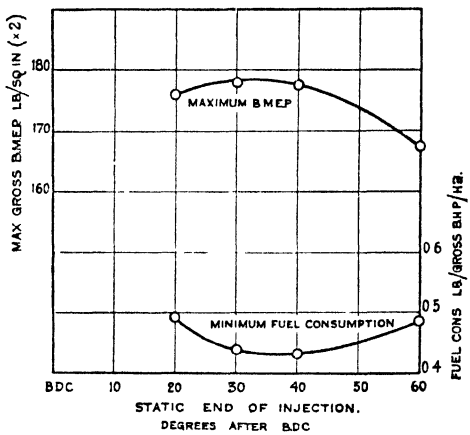

Fig. 18.11.—Effect of injection timing on power and fuel consumption

While these researches were in progress two more single-cylinder units were constructed:

(1) E65/2—a duplicate of the first unit but embodying a few minor alterations which experience had shown to be advisable (figs. 18.12 and 18.13).

(2) E54—a somewhat larger unit having a cylinder bore of 5·1 in. and a stroke of 6·5 in. with the sleeve valve operated from an eccentric on the crankshaft as in the original C.I. version (figs 18.15 and 18.16).

Both these new units, when tested under the same conditions as to speed, porting, timing, etc., gave almost exactly the same performance as that of the original; such small differences as there were fell within the limits of experimental errors, and this despite the fact that the larger experimental unit had a longer stroke and a markedly different stroke-bore ratio.

This confirmation that the results of the tests on the first unit were no mere flash in the pan and could be repeated on other units, even of different geometric proportions, was extremely reassuring, so much so that designs were prepared by Messrs. Rolls-Royce Ltd. for a full-size 12-cylinder aero-engine of the larger cylinder dimensions to be

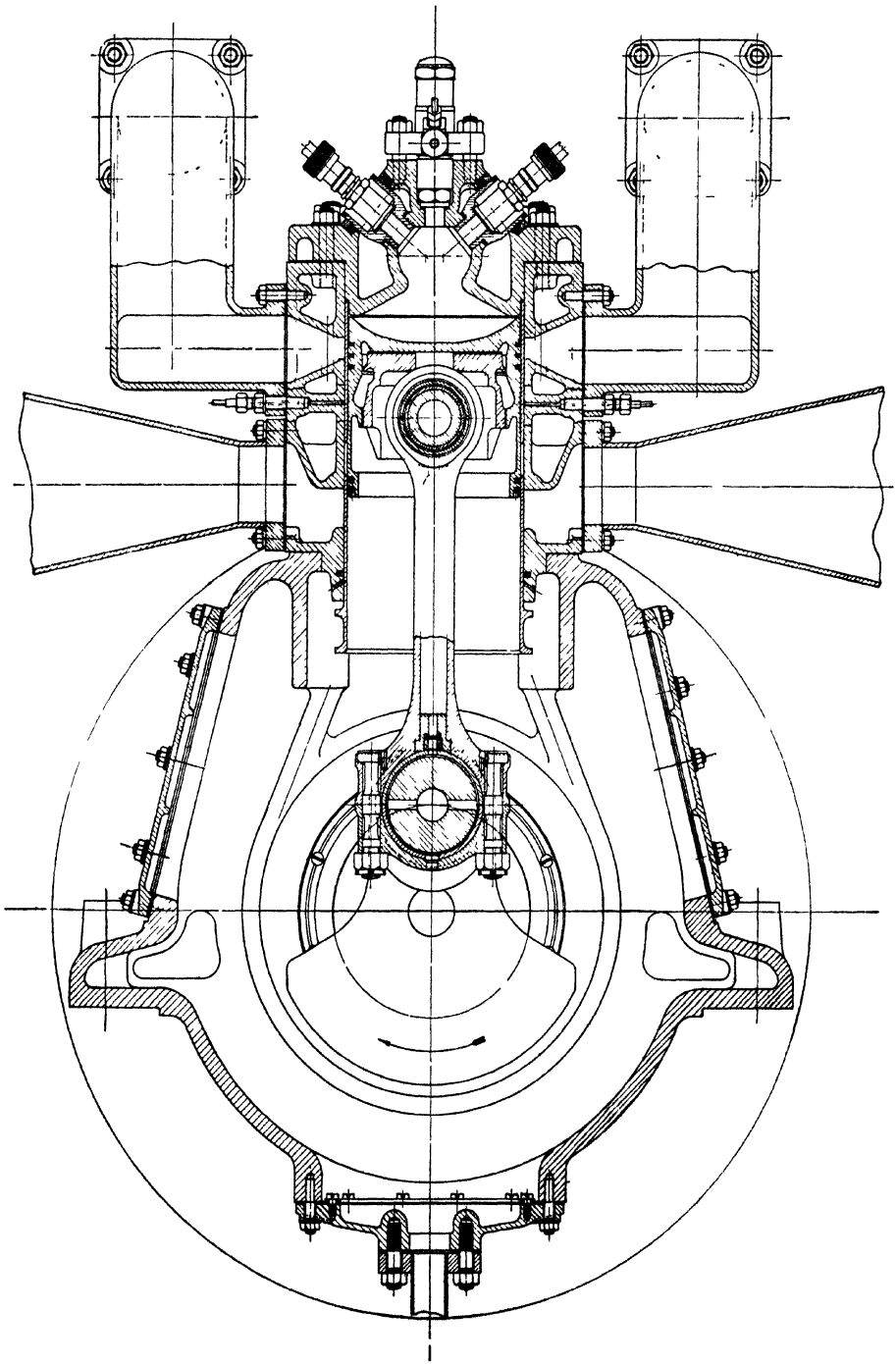

Fig. 18.13.—Cross-sectional arrangement of single-cylinder two-stroke high-power petrol engine, bore 4·81 in. × stroke 5·5 in., type E65

interchangeable with, and of the same weight as, the Rolls-Royce "Merlin" engine.

Research was next directed to the second version, viz. that in which a turbine would be used as a second stage in the expansion.

Since calculation showed that the power developed by the turbine would exceed that required to drive the compressor, provided that sufficient exhaust back pressure was maintained, there was no longer the same incentive either to economize air or to employ a very high ratio of compression, for any wastage of air or surplus heat energy in the exhaust could, to a large extent, be recovered in the turbine. For these tests, therefore, arrangements were made for the application of back pressure by throttling the exhaust at a point beyond the first large expansion chamber.

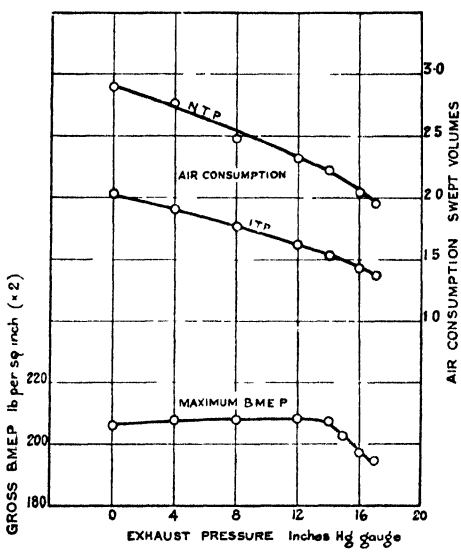

Fig. 18.14.—Effect of varying exhaust back pressure on power and air consumption

Since the supercharge was now to be obtained by the imposition of back pressure on the exhaust, it was no longer necessary to keep the inlet ports open so long after the exhaust had closed, the primary objective now being to obtain the maximum blow-through area, and therefore the minimum pressure drop, through the cylinder. After a great many further trials with varying phase relations as between the sleeve and piston and varying areas of porting, the combination shown as the "wide" timing in fig. 18.6 was finally arrived at as the best all-round compromise. The reduction in compression ratio from 8·4 to 7·0, coupled with a further reduction in the effective expansion stroke due to the earlier opening of the exhaust, had the effect of increasing the specific consumption from a minimum of 0·375 lb. to 0·42 lb. per gross B.H.P. hour, but this difference, it was anticipated, would be compensated for by the more efficient use of the exhaust energy in a turbine rather than by direct jet propulsion. By raising the exhaust back pressure and, of course, that of the incoming air in step with it, it was possible to attain any desired degree of supercharge, and brake mean pressures as high as (320 × 2) lb. per sq. in. were ultimately reached using 100 octane fuel and water injection.

The first step was to ascertain the effect on the general behaviour

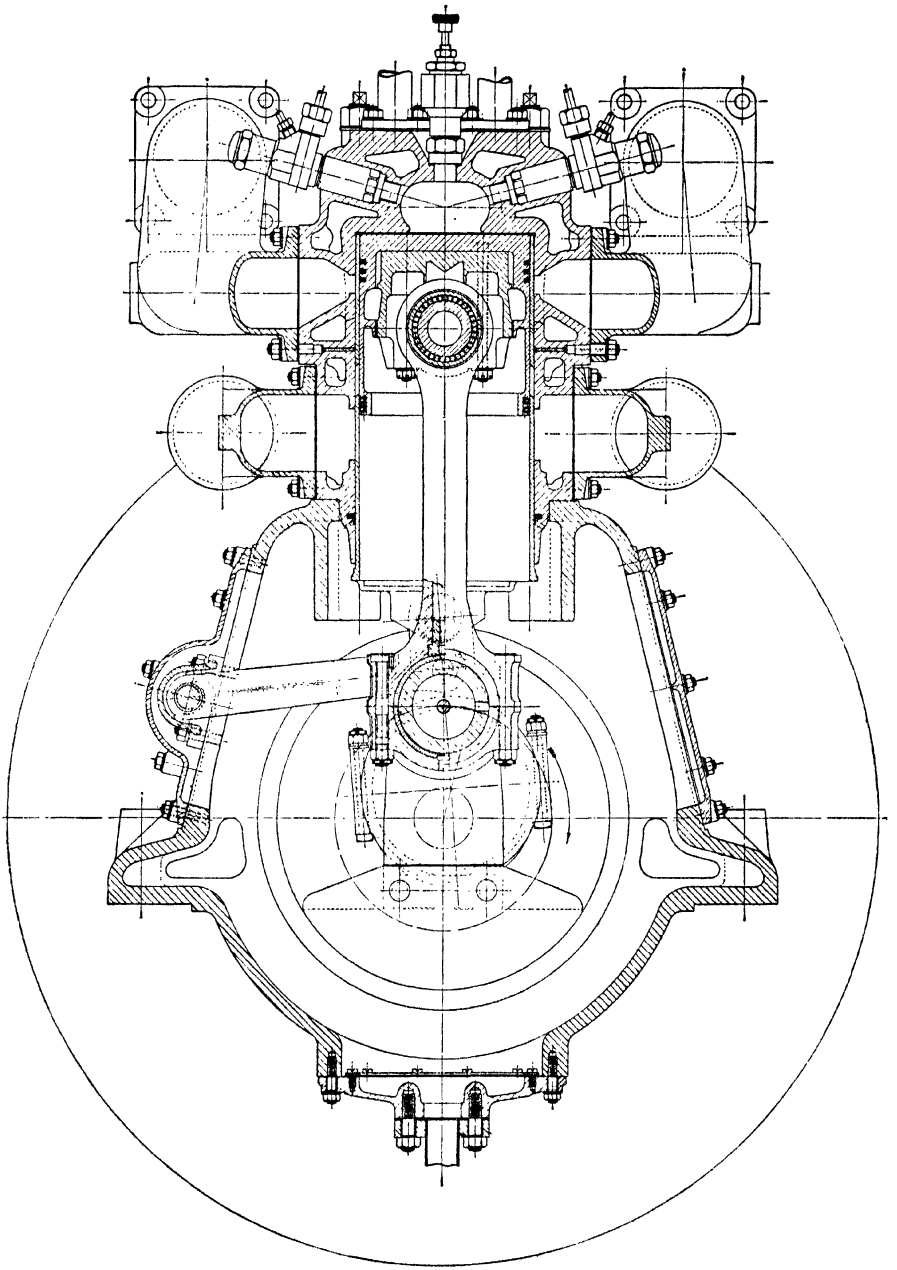

Fig. 18.16.—Cross-sectional arrangement of high-speed two-stroke compression-ignition engine, bore 5·10 in. × stroke 6·50 in., type E54

of the engine of the imposition of exhaust back pressure. To this end tests were run with a constant scavenge air pressure of 15 lb. per sq. in. (gauge) at a temperature of 110° C., while the exhaust back pressure was varied from 0 to 8 lb. per sq. in. with the result shown in fig. 18.14, from which it will be seen that the B.M.E.P. remained substantially constant at (208 × 2) lb. per sq. in., up to an exhaust back pressure of 7 lb. per sq. in., leaving a pressure difference of 8 lb. per sq. in. for effective scavenging. Above 7 lb. per sq. in. back pressure the B.M.E.P. fell away due to lack of air. It appeared then that, as would be expected in the case of a two-stroke engine, exhaust back pressure had no ill-effect upon the functioning of the engine so long as the differential pressure between intake and exhaust was adequate for efficient scavenging. Similar tests revealed also that the imposition of exhaust back pressure had no measurable effect upon either the heat flow to the cylinder jacket, the tendency to detonate or on the specific fuel consumption provided always that a sufficient differential pressure to ensure adequate scavenging was maintained.

Tests carried out to determine the heat flow to the cylinder jackets showed that in terms of percentage of B.H.P. the heat flow to the cooling water was only 33·5 per cent of the gross B.H.P. as compared with 47 per cent in that of a four-cycle sleeve-valve unit of the same cylinder dimensions and supercharged to the same B.M.E.P., but to this should be added 4·8 per cent of the gross B.H.P. carried away by the lubricant including piston cooling. The actual figures obtained from one such comparative test may be of interest and are given in Table I.

TABLE I

	Four-cycle	Two-cycle
Compression ratio ..	7·3 : 1	7·1 : 1
Speed (r.p.m.)	2500	2750
Boost pressure	7·0 lb. per sq. in.	11·0 lb. per sq. in. 2 lb. exhaust back pressure
Boost temperature ..	110° C.	110° C.
B.M.E.P.	204 lb. per sq. in.	(204 × 2) lb. per sq. in.
Gross fuel consumption	0·43 lb. per B.H.P. hour	0·42 lb. per B.H.P. hour
Boost air (swept vol. at N.T.P.)	1·25	2·2
Heat to coolant (per cent of B.H.P.)	47 per cent	33·5 per cent
Heat to oil (per cent of B.H.P.)	Not measured	4·8 per cent (including piston cooling)

It is a little unfortunate that the two tests were not run at exactly the same speed or exactly the same compression ratio, but the dif-

ference is so small in each case as to have a negligible effect on the comparison, from which it will be seen that the cooling drag of the two-cycle is very much less than that of the four-cycle. Both tests were run at about the most economical mixture strength.

A long series of tests was carried out to determine the tendency of the two-cycle engine to detonate when using fuels of 72·5, 87, 92·5, and 100 octane number over a range of compression ratio from 6 to 7·0 : 1. In these tests, the results of which are shown in fig. 18.17, the B.M.E.P. at each compression ratio was raised by raising both the boost and back pressure until detonation became just audible at maximum power mixture strength and with optimum ignition advance. It will be noted that with 100 octane fuel at a C.R. of 7·0 : 1, a B.M.E.P. of just over (240 × 2) lb. per sq. in. was reached before audible detonation could be detected.

In the course of these tests it was noted:

(1) That variations in intake air temperature from 50° C. to 150° C., though affecting the power output, had only a very slight effect on the tendency to detonate.

(2) That unlike a four-cycle engine, enriching the mixture beyond about 30 per cent excess fuel had little or no effect in suppressing detonation.

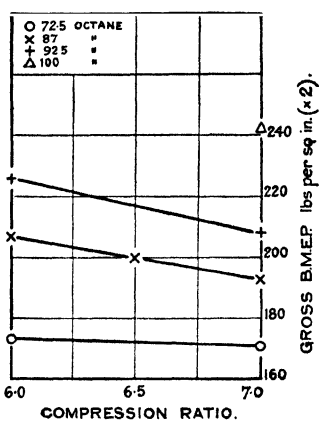

Fig. 18.17.—Effect of octane number of fuel at different compression ratios

In brief, the tests revealed that, with economical mixtures, detonation occurred at much about the same B.M.E.P. in the two- as in the four-stroke engine, or, in other words, that if detonation were the only limiting factor, the two-cycle could develop double the power of the four-cycle.

Side by side with the calibration and research tests a number of prolonged endurance tests were carried out. Of these the most severe was a test of 250 hours duration on one of the " E65 " 4·81 in. × 5·5 in. units at a continuous high power rating, the conditions being:

Speed, 2750 r.p.m.

Scavenge air pressure, 15·2 lb. per sq. in.

Scavenge air temperature, 110° C.

Exhaust back pressure, 6·5 lb. per sq. in.

Brake mean pressure, (200 × 2) lb. per sq. in.

Gross B.H.P., 142 or 87 B.H.P. per litre of cylinder capacity.

The test was run for the most part in spells of 10 hours at a time; there were a few involuntary stops due to external plumbing troubles

caused by vibration, but none due to any failure of the engine itself, nor was any part of the engine disturbed or adjusted throughout the entire 250 hours at this high output. At the conclusion of this test the engine was stripped and examined when all the working parts were found to be in excellent condition and all piston-rings free.

This test was followed by a special Air Ministry Type Test of 115 hours based on a gross take-off power of 170 B.H.P. or 104 B.H.P. per litre of cylinder capacity. The same working parts as had been used in the 250 hours' endurance run were employed again. This test was also carried through without any breakdown or adjustment and at its conclusion the condition of the parts was still excellent. The sleeve, in this case a nitrogen-hardened austenitic-steel sleeve with satin finish as shown in fig. 18.18, had run in all 515 hours; wear in the sleeve bore was negligible, while the maximum wear at the top sealing edge was 0·0025 in. The piston, which had run in all 375 hours, was also in excellent condition, the maximum ring-groove wear being only 0·0025 in. in the top ring groove. Both these endurance tests were run at a lubricating-oil consumption ranging between 3 and 4 pints per hour, which rate had been established as about the optimum from the point of view of piston-ring and ring-groove wear at these high outputs; but, for lower duties, the oil consumption, it was found, could be reduced safely to about 2 pints per hour. At no time was any difficulty experienced with oil control.

In all, during the years 1938–45 a total of 6768 hours was run on the three single-cylinder units, including 2272 hours of endurance running at outputs ranging from 75 to 105 gross B.H.P. per litre.

During the war years in particular great care had to be taken to avoid any risk of serious breakdown, for any major catastrophe would have involved very long delay before replacement parts could be made, but when, in 1945, the decision was taken not to proceed with any further development of new designs of high-powered piston engines, the need for such caution no longer remained, and the opportunity was taken to subject one of the " E65 " 4·81 × 5·5 in. units to a really high-power test. In order to permit of a heavy supercharge, the ratio of compression was reduced to just under 6·0 by the simple expedient of packing up the cylinder head, and, at the same time, the capacity of the fuel injection pump was increased to the absolute limit of the existing pump body by fitting an 11-mm. in place of the standard 10-mm. plunger.

The first high-power run was carried out using standard 100 octane fuel, when a maximum of 267 gross B.H.P. at a speed of 3500 r.p.m. was reached and maintained for 10 minutes [corresponding to a gross B.M.E.P. of (302 × 2) lb. per sq. in.] with an air intake pressure of 33·5 lb. per sq. in. at an air intake temperature of 57° C. and an exhaust back pressure of 11 lb. per sq. in., the differential pressure being 22·5

lb. per sq. in. During this test detonation was fairly severe; thus it represented the limit that could be achieved on standard 100 octane aviation fuel with partially intercooled air.

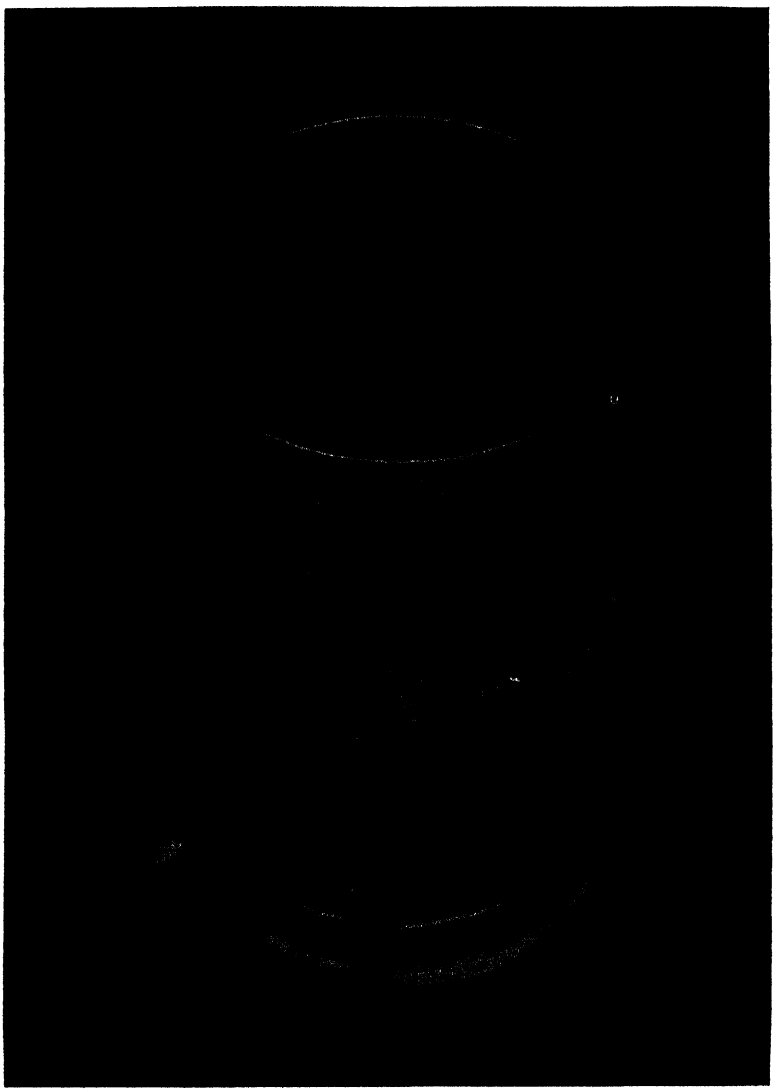

Fig. 18.18.—Nitrided sleeve with satin finish

In order to eliminate detonation, the next test was run with water injection when a gross power output of 284 B.H.P. was reached at a speed of 3500 r.p.m. and maintained constant for 20 minutes. This corresponded to a B.M.E.P. of (321 × 2) lb. per sq. in., with an intake

air pressure of 36 lb. per sq. in. and an exhaust back pressure of 12 lb. per sq. in. During this test the running was remarkably smooth and steady with no trace of detonation, the power output remained constant throughout and there was nothing to indicate that the engine could not have carried on for many hours at this output. On stripping down after these tests all the working parts appeared to be in excellent condition and the engine was re-erected without any replacements.

As a next step the speed was increased to 3750 r.p.m. when a gross power output of 308 B.H.P. (188 H.P. per litre) was obtained, corresponding to a B.M.E.P. at this speed of (325 × 2) lb. per sq. in. This proved to be the extreme limit of the fuel injection pump. During this test also the running was extremely smooth and steady. Since no more fuel could be injected per cycle the speed was increased to 4000 r.p.m. when a gross power output of 323 B.H.P. (197 H.P. per litre) was attained, but after 8 minutes the power fell slightly and the engine was shut down. On examination it was found that the piston had partially seized, due probably to insufficient clearance for so high a duty. A new piston with increased clearance was fitted and, after running-in, the same test was repeated without any falling-off in power. Since no more fuel could be admitted via the injection pump, it was decided to supplement the fuel supply by using a 40/60 water/methanol mixture in place of pure water. With water/methanol injection into the air inlet a maximum power output of 358 B.H.P. (219 H.P. per litre, or 19·7 H.P. per sq. in. of piston) was reached at 4000 r.p.m., with an intake air pressure of 43 lb. per sq. in. Under these conditions, however, the running was unsteady and very rough, in marked contrast to that when using water alone. After 5 minutes at this output the power fell off, and, on shutting down, both the top land of the piston and the top edge of the sleeve valve were found to be burnt away for a depth in places of about 0·2 in., while the upper end of the cylinder bore had been heavily scored by debris from the burnt top edge of the sleeve. This then terminated the programme. There seems little or no doubt that the failure was due to persistent pre-ignition which caused the rough and unsteady running and which, by intensifying greatly the heat flow, was the cause of the final breakdown.

Thus ended a research which had been carried on intensively for a period of six years, for the first two years on one unit alone, and for the remainder of the time on three units, though two further additional units became available towards the end of the period. It was noteworthy that all the units, after a period of development, gave almost exactly the same performance regardless of the fact that their stroke-bore ratios differed considerably. A feature throughout the whole research was the exceptional consistency of the performance, not only of each unit individually, but as between the several units. Thus a test programme started on one unit could be transferred to another

with the certainty that it would respond to the same changes in the same way not only qualitatively but quantitatively. This feature proved a great asset during the war when, owing to the limited machining facilities at the author's temporary laboratory and the difficulty of getting parts made outside, a quite minor modification or breakdown often involved a unit being out of action for several weeks.

During the war years a number of prototype 12-cylinder aero-engines had been built of both versions, viz. with and without the turbine; these had undergone a considerable amount of bench-testing, and would in all probability have come into operational use but for the spectacular success of the turbo-jet which, by 1943, had far outstripped the performance of any piston engine for short-range high-speed machines; thus all further work on new designs of piston engines was either relegated to a low priority or abandoned altogether. In the case of the two-stroke engine, however, it was decided, as a long-range research, to carry on with the third version, namely that in which the turbine became the dominant partner and, for this purpose, the unit " E54 " was retained and converted to C.I. operation.

Mechanical Problems

As stated earlier, most of the major mechanical difficulties had been encountered and overcome during the earlier work on the C.I. versions.

Although the petrol injection units underwent prolonged endurance tests at double the specific power of the C.I. version, very little further mechanical trouble was encountered.

As in the case of four-stroke engines it was found that, with spark-ignition, the piston temperatures were no higher than when working with compression ignition at about one-half the power. None the less, a great deal of effort was devoted to the problem of piston cooling which has, however, been discussed in another chapter.

At the relatively low ratio of compression and high rotational speed as compared with the C.I. version, the inertia of the piston was sufficient to effect a momentary reversal of load in the gudgeon-pin bearing during the compression stroke. This reversal, though slight, and of short duration, was sufficient entirely to eliminate all trouble with this part, and it was possible to revert to the ordinary design of plain-bearing floating gudgeon-pin as in a four-cycle engine. It was only when the units were run at a high supercharge, combined with a relatively low r.p.m., that trouble was experienced. With sufficient piston cooling combined with the use of double-taper piston-rings, no trouble was experienced with either ring sticking or packing out, but at outputs much above 100 H.P. per litre ring-groove wear was rather great.

Throughout all but a few of the tests plain 0·55 carbon cast-steel sleeves were employed running direct in silicon-aluminium alloy cylinders. These were used because:

(1) They could be machined very easily and quickly from centrifugal steel castings.

(2) Being soft it was possible easily to file out the ports and thus make any change in port areas.

(3) During the war period, owing to the heavy demand for sleeves for the Bristol engines, it was almost impossible to obtain nitrogen-hardened sleeves for the two-stroke experiments; such few as could be obtained were reserved for endurance testing at very high outputs.

The soft carbon-steel sleeves wore rather rapidly both at the top sealing edge and also in the bore, in the region of the air inlet ports. So long, however, as the B.M.E.P. did not exceed about (190 × 2) lb. per sq. in. they could be counted upon to last about 600–700 hours before excessive wear at the top sealing edge led to failure due to leakage and burning away. When working, however, at B.M.E.P.s much in excess of (200 × 2) lb. per sq. in., their life was much reduced while, at the higher pressures, the soft bore gave rise to piston-ring scuffing. It then became necessary to resort to the use of nitrogen-hardened austenitic-steel sleeves with a satin finish as had been developed for air-cooled four-cycle sleeve-valve engines. These showed virtually no measurable wear in the bore and only very slight wear at the top edge after many hundreds of hours of running at B.M.E.P.s of the order of (200–250 × 2) lb. per sq. in.

No trouble was experienced with the open-ended sleeve until, in the case of the soft carbon-steel sleeves, wear at the top end became such that the seal broke down. Up to this well-defined point the seal, except when starting up from cold, appeared to be perfect. Failure when it did occur took the form of the burning away of the top edge for a depth of perhaps 0·3 in. and a width of an inch or more, accompanied sometimes, but not always, by severe scoring of the cylinder bore. If inspected in time, the presence of minute cracks could be seen developing in the top edge of the sleeve and these were a signal that failure would occur within a short time. Experience soon taught that so long as the wear at the top end did not exceed a certain well-defined limit, no risk of failure need be anticipated.

With the nitrided sleeves no case of burning or failure of the top sealing edge ever occurred except in the final breakdown test referred to previously; wear was very slight and, even had appreciable wear taken place, the higher coefficient of expansion of the austenitic steel would no doubt have allowed of a much greater cold-clearance before the danger point was reached.

No difficulty was found in controlling the oil consumption, but if this was maintained at less than about 0·02 pints per B.H.P. hour, piston-ring groove wear became severe.

A great deal of development had already been carried out on the cylinder design in the early days, and that which had been found best for the C.I. work served equally well for the petrol injection. The two main problems were:

(1) In the case of a light-alloy cylinder, how to design a structure which would be free from thermal or other distortion, despite the fact that the cylinder barrel was gashed through at two points in its length to provide air inlet and exhaust belts.

(2) How to ensure a uniform and high-velocity flow of coolant around the cylinder barrel above and below the exhaust belt and, at the same time, accommodate adequate bosses for both the cylinder head and the main holding-down bolts.

Many modified versions of cylinder were made and tested, while the flow of the coolant was always explored and checked by Pitot tubes inserted through the wall of the cylinder jacket. Once a design of cylinder had been evolved which would remain reasonably round and parallel, very little further trouble was experienced. It was found that no measurable wear occurred in the cylinder bore at any part, but there was a tendency for the extreme upper end of the barrel to close in slightly, and it was not unusual to find that the bore at the top end had reduced in diameter by as much as 0·002 in. after a few hours hard running. Such few cylinder failures as occurred in the early stages were due to either fatigue fractures developing from one or other of the many stud bosses, or to damage caused by a burnt-out sleeve top end. With improved detail design, combined with the use of nitrided sleeves, no further cylinder troubles were experienced.

Much doubt was felt as to whether a sparking-plug could be found to stand up to the high duties imposed upon it. The best possible plugs were, of course, employed, and in fact very little trouble was experienced with plugs or, for that matter, with any of the ignition equipment.

Very little trouble was experienced with the injection equipment, despite the very high speed at which it was operated. In the first instance two fuel pumps were used running at half engine speed, so that each pump gave one injection on alternate cycles. This, however, proved an unnecessary precaution, and for all the later work a single pump, driven at crankshaft speed, was employed.

Since, with petrol, the injection period was considerably longer than had been used during the C.I. work, it was possible to employ an eccentric in place of a cam; this, combined with a heavier spring on the pump plunger, and the abolition of the tappet adjustment, allowed

of the pump being operated quite satisfactorily at speeds up to 4000 r.p.m.

Again, in the early days of the petrol-injection work, 1 per cent of lubricating oil was added to the fuel as a precautionary measure for pump lubrication. This also proved unnecessary and the bulk of the work was carried out without the addition of any lubricant except that the cam-box of the pump was fed with oil from the main blood stream of the engine.

For the injectors, standard types of single-hole pintle injectors were used exactly as in C.I. engines.

Except for one brief epidemic of big-end bearing trouble on one of the " E65 " units, the cause of which was never explained, no trouble of any kind was experienced with the bearings of any of the units. A number of different " hard " bearing materials were used for the top or loaded half of the big-end bearing, while the lower half was of soft white metal. Of the three units, two had flame-hardened crankshafts and the larger " E54 " a nitrogen-hardened shaft; all behaved well, but, as would be expected, the flame-hardened shafts showed some wear, while that on the nitrided shaft was scarcely measurable.

During part of the period a supercharged four-stroke sleeve-valve unit of the same cylinder dimensions as the " E65s " was run in parallel with the two-cycle units. This had virtually the same shaft and bearing dimensions, and it was noteworthy that the four-stroke engine knocked its bearings about much more severely than the two-stroke units, although the latter were developing double the power. At the same compression and at the same B.M.E.P., with optimum ignition advance in both cases, the maximum cylinder pressures of both the two- and the four-stroke engines were as nearly as possible the same, viz. just 1000 lb. per sq. in. at a B.M.E.P. of 200 lb. and a compression ratio of 7 : 1.

As would be expected, the mechanical efficiency of the two-stroke units (exclusive of the blower work) was very high. The normal motoring friction at 2750 r.p.m. was about (21 $\times$ 2) lb. per sq. in. corresponding to a gross mechanical efficiency of 90 per cent at a normal B.M.E.P. of (200 $\times$ 2) lb. per sq. in.

General Conclusions

The research and development work described in this chapter was all directed towards the evolution of a very compact and light piston engine for aircraft propulsion. Unfortunately it is difficult to see any other use, for the petrol version at any rate. Thanks to its enormously high specific power output, it might be applicable for racing-cars, but in this field the existence of a phase of unstable running between 15 and 40 per cent maximum torque would probably prove rather a severe handicap. In the compression-ignition form it may have other uses,

but a good deal of further development work will be needed before it can be regarded as a commercial proposition. The remaining hurdles to jump are:

(1) The nitrided sleeves have a life of probably between 2000 and 4000 hours before wear of the top end of the sleeve renders them unserviceable. This is long enough for military aircraft, but not nearly long enough for ordinary commercial duties. Some means will yet have to be found for reducing the rate of wear in this zone.

(2) Although the open-ended sleeve appears to seal perfectly under all operating conditions, it does not provide a complete seal when starting from cold, and some means, such as the injection of a little thick oil, must be applied to enable the C.I. version to start from cold; this is rather an objectionable feature.

If these objections could be overcome there may yet be a field for the C.I. version.

CHAPTER XIX

Engines for Research

In this chapter the author proposes to discuss his own personal experiences in connection with the design and development of special engines for research, more especially for research on fuels and into the problems of combustion, and to review in detail both some of the arguments underlying the design of such engines and the defects which later developed in practice, in the hope that his experiences in this direction may be of help to others.

Although such engines are necessarily of a highly specialized nature, most of the mechanical and other problems associated with them apply alike to all internal-combustion engines, for to be really useful instruments of research, such engines must have a very high performance and, above all, must maintain the highest possible standard of mechanical reliability and consistency.

In all research engines and, more especially perhaps, in those devoted to research on fuels or combustion, great significance may attach to quite small changes in performance, changes such as might pass unnoticed, or be swamped by the hour-to-hour vagaries of an ordinary commercial engine. Again, it is essential, of course, that the performance shall always check back, for nothing is more disastrous for research than a wandering zero. To ensure such consistency it is essential that all possible variables shall be reduced to the absolute minimum, and of these variables, the internal friction is usually both the largest and the most capricious.

The author's experience of research dates from 1904 when, as an undergraduate at Cambridge, he assisted the late Professor Bertram Hopkinson with his research work on the internal-combustion engine in the engineering laboratories at Cambridge University. For this there were available three engines, a single-cylinder 40 H.P. gas engine, a four-cylinder 16 H.P. Daimler petrol engine, and a home-made two-cylinder two-cycle petrol engine of about 12 H.P., besides several explosion vessels of various shapes and sizes, but very few instruments of any kind. Hopkinson was interested at that time in exploring the problems of combustion, more especially as applied to high-speed engines, and, to this end, in the development of an indicator suitable for high speeds.

With extraordinary ingenuity and sound practical knowledge, Hopkinson designed and very quickly developed a remarkably efficient optical indicator with which he could observe and record the rate of pressure rise and other changes during the process of combustion with far greater accuracy and at far higher speeds than had been achieved hitherto. Among other things he was able to show—contrary to current belief—that the knock in the petrol engine was a phenomenon quite distinct from pre-ignition; the latter gave a rate of pressure rise identical with that from normal spark-ignition, while, when knocking, the petrol engine showed a normal rate of pressure rise until combustion was almost complete, followed by a very abrupt rise just at the end, so violent and so abrupt as, on many occasions, to shatter the mirror of his indicator. This, with his customary insight, he attributed to the setting up of an explosion wave. Since he could not produce a similar effect in the gas engine, or when running the petrol engine on gas, he concluded that the knock, or "detonation" as he termed it, was a characteristic of the fuel, and there, for the time being, the matter ended, for after 1907 Hopkinson turned his attention to quite other lines of research.

The author was deeply impressed by this suggestion, all the more so because his cherished two-stroke engine was terribly addicted to knocking, and after leaving Cambridge in 1907, he determined to pursue it further in his spare time and in his own private workshop. With the help of one of Hopkinson's indicators, he was able, in this engine, to explore the incidence of detonation, its progressive stages and its ultimate degeneration into pre-ignition. He observed, too, that when running the engine on benzol, no detonation occurred, but that the tendency to pre-ignition was greater than on petrol. Again, when running on kerosene, detonation was intolerably violent but there was little or no pre-ignition, all of which tended to support Hopkinson's suggestion that detonation was primarily a characteristic of the fuel. As a result of these and many other such observations the author became convinced that detonation was the over-riding factor controlling the performance of the petrol engine, and that the most profitable line of research lay in a thorough investigation into the phenomenon of detonation.

Two major difficulties, however, presented themselves:

(1) The only engine at the author's disposal was a two-stroke engine which he had made in the Cambridge workshops and which was far too unreliable and inconsistent for use as a research unit. It served well enough to indicate general trends and tendencies, but was clearly useless as an instrument of precision.

(2) Nobody, other than Professor Hopkinson, appeared at that date, 1908–10, to be much interested, nor would they listen, for

a moment, to the suggestion that the knock in the petrol engine was anything other than pre-ignition, due to local hot spots in the combustion chamber, and since improved cooling certainly reduced the tendency to detonate, there appeared to be some support for this contention.

Failing to get any support or encouragement for such a research, the author set about the design and construction of a single-cylinder four-stroke engine in part for this purpose, but also to explore the effects of supercharging by means of a stratified charge of air admitted, as a topping-up supercharge, through ports uncovered by the piston at the end of its stroke, for, by that time, he had become deeply interested in aero-engines and believed that sea-level power could be maintained up to reasonable altitudes by the progressive admission of a supercharge of air alone, using an uncompensated carburettor which automatically would enrich the primary charge as the density fell. This unit took a long time to make and was not completed till late in 1913. It employed a crosshead piston as used later in the 1916 tank engines, and an L-headed combustion chamber; the mechanically operated inlet valve was situated directly over the exhaust, the sparking-plug in the valve pocket, with a flat pancake combustion chamber extending over the whole area of the piston. The underside of the crosshead piston was used to provide a topping-up supercharge of air alone, admitted through ports in the cylinder barrels which were uncovered by the piston at the end of the stroke. These could be opened or closed at will by a hand-operated sleeve surrounding the belt of ports formed in an extension of the cylinder barrel. Power output was absorbed by a swinging-field electric dynamometer consisting of an ordinary shunt-wound D.C. generator mounted on ball-bearing trunnions and controlled to within fine limits by a variable resistance in the field circuit. With a compression ratio of 4·6 : 1 and with the supercharge shut off, the engine detonated heavily on full throttle on most contemporary petrols, but would run, without detonation, on benzol even with full supercharge. The method then adopted to assess the resistance of different fuels to detonation was gradually to open the throttle and note at what B.M.E.P. detonation first became audible. If full throttle could be reached without the incidence of detonation, then the ports in the cylinder barrel were opened and the supercharge admitted and increased gradually until detonation occurred. Thus the tendency of the fuel to detonate was assessed in terms of the B.M.E.P. at which detonation first became audible. The upper limit of B.M.E.P. with full supercharge was, in this case, about 150 lb. per sq. in. This set-up and technique served well as a rough sorting-out process and to reveal that, of the main constituents of petrol, the paraffin series were the most prone to detonate, the aromatics the least, while the naphthenes

appeared to occupy a place about midway between the two. Of the coal tar derivatives no trace of detonation could be heard with full supercharge on either benzene, toluene, or xylene, but by preparing blends of each with a sample of petrol, it was possible to show that toluene appeared to be the best of the three.

At that date, however, and without any direct assistance from the suppliers, it was extremely difficult either to get any pure samples or even to be at all sure as to the composition or uniformity of such samples as could be obtained. The author had been fortunate, however, in having a friend—an organic chemist—who very kindly made analyses of some of the samples and procured others for him.

During the early stages of the 1914–18 war the author came into contact with Sir Robert Waley Cohen of the Asiatic Petroleum Co. who was very interested in the results he had obtained and arranged for the supply of samples of petrol from the different oil-fields controlled by the Shell Group, all of which were tested in the manner described. It was then, however, that the apparatus and technique proved somewhat inadequate, for neither the method first adopted, nor the consistency of the engine were good enough to detect small but none the less important differences as between fuels derived from one oil-field or another, for, expressed in terms of octane number, the accuracy of measurement was at best equivalent to only about $\pm$ 3 octane numbers.

This led to an investigation into the causes of inconsistency which fell under the following heads:

(1) Variations in mechanical efficiency due partly, but not wholly, to lack of control over oil temperature.

(2) Variations in the temperature of the supercharge which could not be controlled.

(3) Lack of sufficiently accurate control over mixture strength or ignition.

(4) Leakage due to slight distortion of the cylinder barrel, exhaust valve and valve seat.

(5) Sensitivity to carbon deposits, which were aggravated by the entry of oil through the supercharge ports.

(6) Liability to pre-ignition due to overheated sparking-plug points or exhaust valve.

Of these variables, erratic changes in mechanical efficiency were the most troublesome and the most elusive for, under apparently identical temperature and other conditions, the total friction losses as measured by motoring would vary from day to day by as much as 2 or 3 lb. per sq. in. B.M.E.P., and that for no apparent reason.

As a means of assessing the finer shades of difference between petrols from one oil-field and another, the method of measurement

proved too coarse, for a small difference in the M.E.P. at which detonation occurred represented quite a considerable difference in the tendency of the fuel to detonate. Sir Robert, however, was by no means discouraged, for the tests, in which he took a close personal interest, had at least convinced him that the incidence of detonation was in fact the controlling factor governing the performance of spark-ignition engines, and that it was largely a function of the fuel, a fact which certainly had not been realized, even at that date, either by the suppliers of fuel or by the makers or users of petrol engines. On the strength of these observations he commissioned the author, as soon as the first world war was over, to undertake a really large-scale and comprehensive research into the factors controlling the suitability of different fuels for spark-ignition engines, of which the tendency to detonate was clearly the most important, but of course by no means the only one. For this purpose he gave him a free hand to design and build such equipment as he considered necessary.

Up to this point the research had been carried out as a single-handed effort in the author's small private workshop, on a home-made engine and test equipment, and had been severely handicapped for lack of facilities and funds. With the financial support and technical assistance of the Shell organization, and with the facilities available at the author's new laboratory at Shoreham-by-Sea, the research at once took on a very different complexion.

Experience with the original supercharged engine had satisfied the author that:

(1) The method of measuring the tendency to detonate by noting the B.M.E.P. at which it occurred in a throttled or supercharged engine was not the best, nor was it a sufficiently convincing one since supercharging was not recognized, at that date, as a practical proposition.

(2) Any engine used for such an investigation would need to have a far higher standard of consistency than had his home-made unit.

(3) Since both the power output and efficiency of an internal-combustion engine depended upon the ratio of compression employed, it would be both more convincing and more realistic if the tendency of the fuel to detonate could be measured in terms of the highest compression ratio at which it could usefully be employed (H.U.C.R.). It would have the further advantage, also, that the measurement would not depend on readings of brake mean pressure and would not therefore be influenced to anything like so large an extent by variations in mechanical efficiency.

It was realized, of course, that the H.U.C.R. could be no absolute

measure, since much would depend upon the size, speed, and general design of the engine in each case, but a suitable yardstick could always be supplied by expressing the H.U.C.R. in terms of some equivalent proportion of a non-detonating fuel such as toluene in a reference fuel which was known to detonate very readily. Many years later it was decided, as an international rating, to express the H.U.C.R. of a fuel in terms of the proportion of iso-octane in *n*-heptane; thus an octane number of, say, 60 meant that, so far as its tendency to detonate was concerned, the sample fuel was equivalent to a mixture of 60 per cent iso-octane and 40 per cent *n*-heptane.

After much thought it was decided to design and have built a special research engine in which the ratio of compression could be varied over a wide range while the engine was running on full throttle, in order that the alteration of ratio could be effected without any change in the mechanical or temperature conditions, and to do everything possible to eliminate wandering errors. It was realized also that to be realistic and convincing it was essential that the performance of the engine in the way of power output and thermal efficiency should be at least equal to the best of that of contemporary engines. To this end, every known step was taken to achieve the highest possible thermal and volumetric efficiencies, to reduce to the absolute minimum all internal friction, and to render what remained as insensitive as possible to variations in oil temperature.

It was decided also to employ a fairly large cylinder of about 2 litres capacity:

(1) In order to keep in line with aero-engine practice, because the limit imposed by detonation was felt most acutely in the case of aero-engines.

(2) It was thought that the larger the cylinder the less susceptible would it be to minor variables.

A long stroke was considered to be advisable:

(1) In order that, even at the highest compression ratio, the depth of the combustion chamber should not be too shallow and that the volume/area ratio should change as little as possible with change of compression.

(2) In order to keep the oil consumption as low as possible, on the argument that the smaller the mouth of the cylinder and the greater its distance from the crankpin, the smaller the proportion of oil that would be thrown on to the cylinder walls, for at that date no really satisfactory oil control rings had been developed, and it was obvious that the passage of any appreciable quantity of lubricating oil into the combustion space would hopelessly confuse the issue.

(3) It was desirable to run, or at least be able to run, at a high piston speed, preferably well in excess of that of contemporary practice, but undesirable on the score both of mechanical efficiency and of vibration to run at too high a revolution speed.

With these considerations in mind, a cylinder bore of 4·5 in. and a stroke of 8 in. were chosen.

In order to reduce to the minimum the internal friction losses, the lightest possible reciprocating and rotating parts were employed, i.e. a very light aluminium slipper-type piston, and a thin tubular connecting-rod, with a solid big-end eye.

Wherever possible ball bearings were employed in place of plain bearings, partly in order to reduce friction, but mainly because their friction is less sensitive either to changes in oil temperature, or to possible errors in alignment due to crankshaft deflection under load.

Yet a further argument in favour of ball bearings was that only the connecting-rod big-end bearing need be pressure-lubricated, thus reducing the quantity of oil flying around in the crankcase and so easing the problem of oil control.

In order to allow of the use of an unsplit big-end bearing, the crankshaft was built up with a detachable case-hardened crankpin; the big-end bearing itself consisted of a thin and freely perforated phosphor-bronze floating bush running between the hardened crankpin and a hardened steel bush pressed into the eye of the rod.

In order, as far as possible, to avoid any cylinder distortion, the cylinder barrel, together with its water jacket, was circular and symmetrical throughout the whole length of the piston travel.

In order to provide efficient cooling around the sparking-plugs and throughout the cylinder head, a high-velocity water circulation was employed concentrated more especially around the sparking-plug bosses and exhaust-valve seatings.

In order to maintain, at all times, as nearly as possible a constant temperature of the cylinder barrel, and therefore constant viscosity of the oil on the barrel, the water jacket below the sparking-plug bosses was separated by a diaphragm leaving only a few small communicating holes as steam vents; thus throughout the length of the barrel the water remained stagnant, and very quickly reached and remained at boiling-point; hence the temperature of the cylinder barrel remained constant and was virtually independent of that of the cooling water.

The joint between the cylinder head and barrel was a metal-to-metal ground face with no packing of any kind. The object of this was:

(1) To avoid any heat barrier.

(2) That any variation in the thickness of the packing used would, of course, alter the compression ratio and therefore upset the calibration of the engine.

Incidentally this joint never gave the slightest trouble, never needed regrinding, no matter how often the head was removed, and never leaked.

In order to keep the exhaust valves as cool as possible, three small valves were used in preference to one or two larger ones, while in order to provide ample breathing capacity, two large inlet valves were employed. It was hoped to be able to obtain very accurate measurements of both fuel and air consumption, hence it was thought essential to avoid any valve overlap, which might allow either of fuel and air short-circuiting to exhaust, or of a backwash of exhaust into the cylinder or induction pipe. Since in order effectively to empty the cylinder the exhaust valves would have to be held off their seats until about 10° after top centre, this meant a very late opening for the inlet valves. In fact this did not prejudice the volumetric efficiency to any appreciable extent, but it did result in:

(1) A rather large depression at the beginning of the suction stroke and hence an increase in the air-pumping work.

(2) Rendering the air intake excessively noisy.

At a later stage it was found that an overlap of as much as 10 to 12 crankshaft degrees could be employed without any measurable effect on the fuel or air consumption.

Provision was made for four sparking-plugs arranged symmetrically round the combustion chamber, and, in order to ensure synchronism, four separate ignition coils were employed, the low-tension circuits of which were all operated from a single contact-breaker. It was found, however, that no advantage was gained by using more than two plugs at a time, and this left two points of access to the cylinder for indicator or other connections.

Variable compression was achieved by raising or lowering the whole cylinder in relation to the crankshaft. To this end the external surface of the cylinder jacket was machined and ground truly cylindrical and carried in a rigid mounting attached to the crankcase in which, when a friction grip was released, it was free to slide up and down. A very coarse screw thread was formed on the lower end of the jacket which engaged with a ring nut located between the mounting and the crankcase. The nut in turn could be rotated by means of a bevel gear and hand-wheel. Some doubt was felt at first whether it would be found possible to raise or lower the cylinder while running at full throttle; in practice no difficulty whatever was experienced, nor was any appreciable effort involved. The extreme range of compression ratio provided was from 3·7 to 8·0 : 1, for it was thought, from previous experience, that all petroleum fuels would be found to detonate far below this latter figure. The working parts of the engine, piston, connecting-rod, bearings, etc., were designed for continuous running at a maximum

pressure of 700 lb. per sq. in., corresponding to a compression ratio of about 6·5 : 1, for it was thought that this would not be exceeded, except possibly for some short snap tests on freak fuels.

For recording the ratio of compression a micrometer was provided, as shown in the photograph, fig. 19.1. For fuel consumption readings

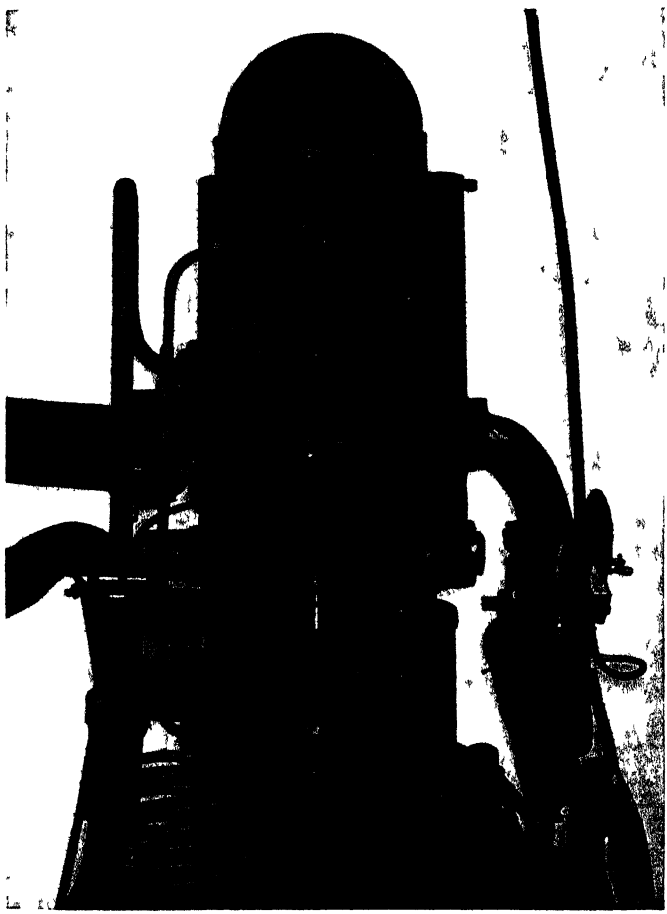

Fig. 19.1.—Upper part of engine showing micrometer for measuring compression ratio

two double burettes were provided with a three-way cock, one containing the standard reference fuel and the other the sample under test. The capacity of each burette was such as to supply enough fuel for approximately 1 minute or 4 minutes, at full load (fig. 19.2).

In addition to a tachometer, a magnetically operated revolution counter was connected to the free end of the camshaft, which recorded the exact number of revolutions during each actual consumption test.

For measurements of air consumption a small balanced gas-holder was provided containing sufficient air for about 1½ minutes at full load, and this also was interconnected with the revolution counter.

A standard aircraft-type Claudel-Hobson carburettor was used, but modified in that the area of the jet was controlled by a fine taper

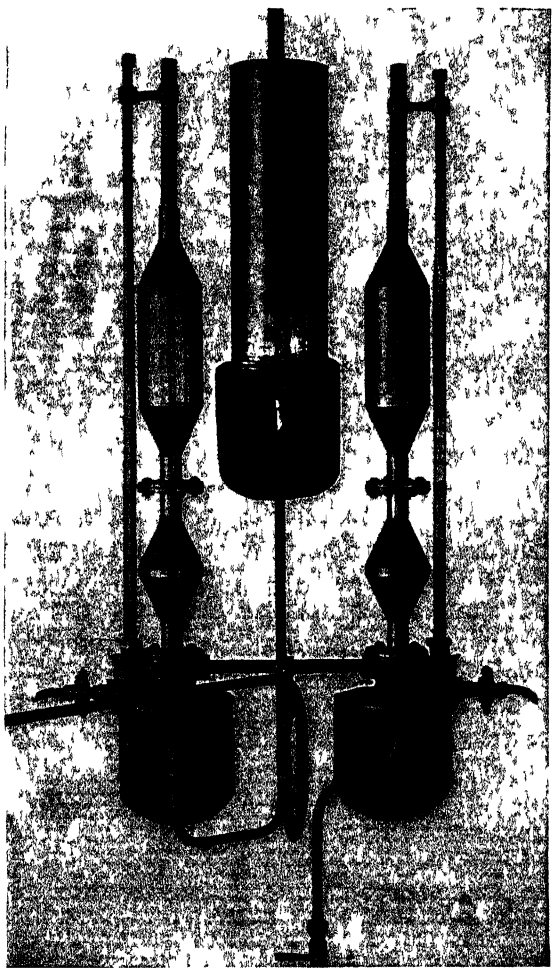

Fig 19 2.—Fuel-measuring device

needle-valve, by means of which the mixture could be varied over the entire range. An electrically heated air heater was fitted to the intake side of the carburettor with a fine adjustment control, so that the heat input, which was recorded in watts, could be regulated to within very close limits. The exhaust was conveyed by a short flexible pipe to a

large expansion chamber. The general layout of the test equipment is shown in fig. 19.3.

Completion of the first engine, which was known as the " E35 ", coincided with that of the author's new laboratory at Shoreham-by-Sea in the spring of 1919. Thus not only were ample facilities available on the spot, but there were also available all the resources and technical assistance of the Asiatic Petroleum Co. whose chemists and scientists gave their whole-hearted co-operation, added to which both Sir Henry Tizard and Sir David Pye were retained as consulting physicists, so that the research started with every advantage that talent, equipment, or money could provide. Figs. 19.4 and 19.5 show sectional drawings of the " E35 " engine.

A considerable time was spent in testing the engine and equipment and learning the best technique and test conditions. When first started up it was found that the engine developed its maximum torque at a speed of 1800 r.p.m., corresponding to a piston speed of 2400 ft. per min. At this speed, however, the vibration was considerable and the noise excessive. It was found that a speed of 1500 r.p.m. seemed to be the most comfortable, but at this speed the torque was still rising which rendered accurate speed control rather troublesome. A new camshaft was therefore made and fitted giving an earlier closing to the inlet valves; this brought the peak of the torque curve down from 1800 to about 1350 r.p.m.; thus at 1500 r.p.m. the engine was running on a slightly falling torque, which gave much steadier running and a stable speed characteristic. From a mechanical point of view the engine ran perfectly, right from the start, and, beyond a little time spent in finding the best clearance for the piston, etc., no trouble of any kind was experienced. A good deal of time was naturally spent in getting the electrical and other test gear adjusted and, above all, in learning both the drill and the degree of accuracy and consistency that could be relied upon.

As to the accuracy of measurement, it was found that the brake mean pressure could be measured with certainty to an accuracy of $\pm 0{\cdot}15$ per cent, the fuel consumption to an accuracy of $\pm 0{\cdot}25$ per cent, and the air consumption, with careful temperature control, to an accuracy of $\pm 0{\cdot}5$ per cent. The wandering error in the engine's performance was found to be very small, for it could be relied upon during the course of a day's run to check back at any time to within $\pm 0{\cdot}25$ per cent.

The total frictional and pumping losses, as measured by motoring after each test, never varied by more than 0·3 lb. per sq. in. and, as had been hoped, were nearly independent of oil or water temperature.

As to the determination of the H.U.C.R., this was very sharply defined and it was found that an observer could, after a little practice, determine with certainty, to within one-twentieth of a ratio, the ratio of

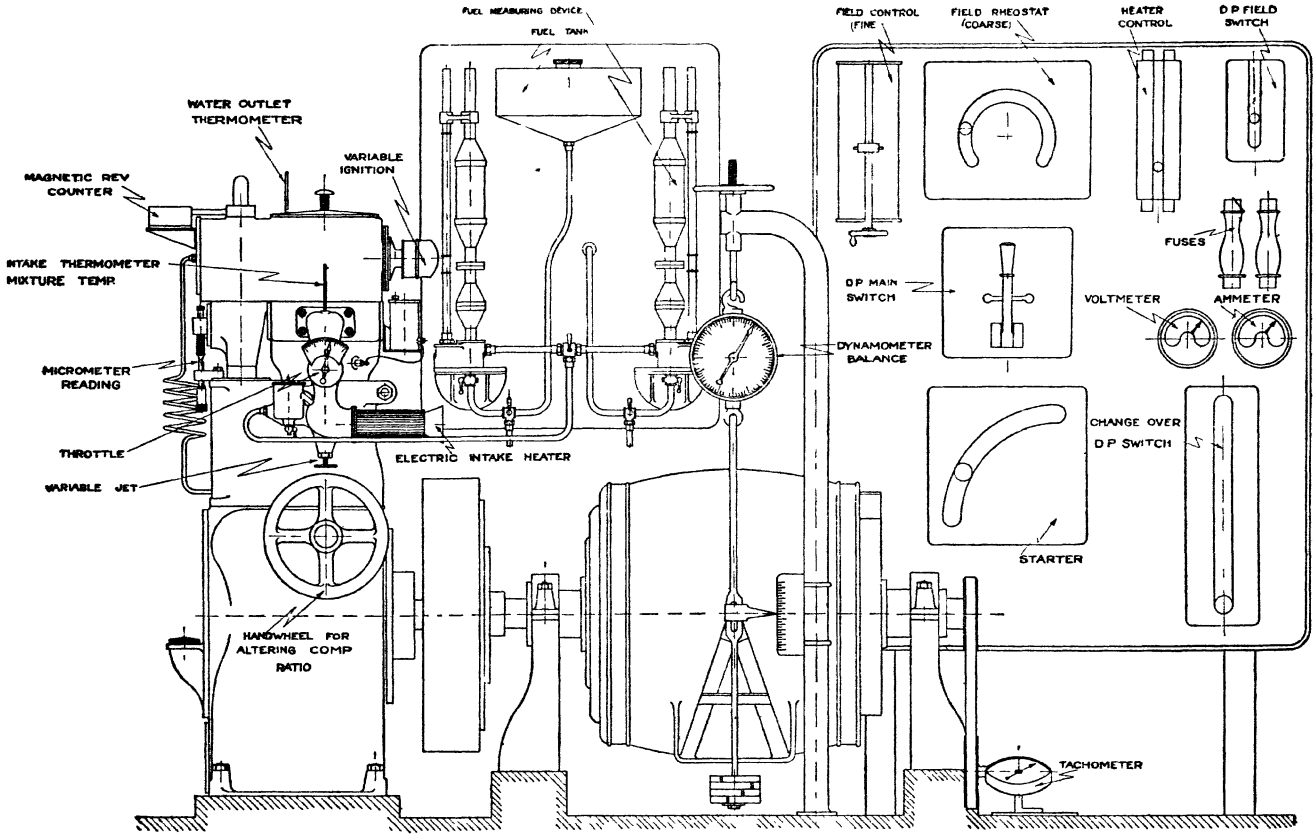

Fig. 19.3.—General layout of testing apparatus

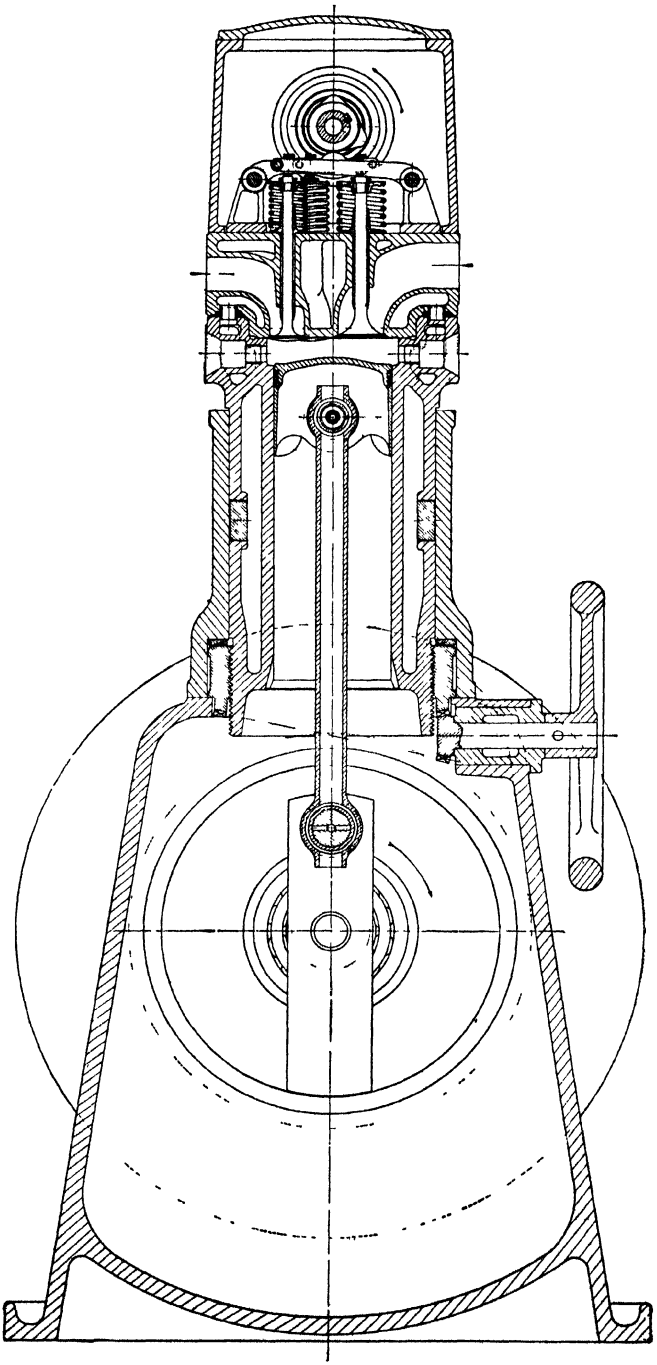

Fig. 19.4.—Cross-section of the E35 variable-compression engine

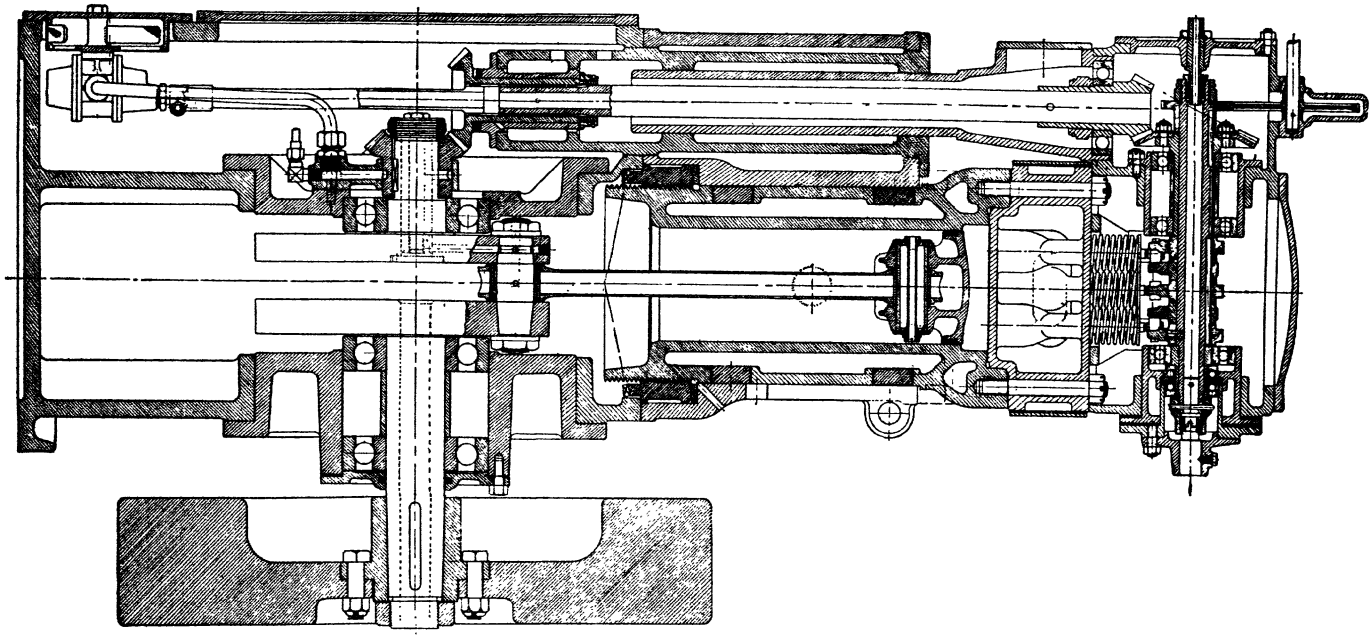

Fig. 19.5.—Sectional side elevation of the E35 variable-compression engine

compression at which detonation first became audible when operating in the range 4 to 6·0 : 1, equivalent to about one-half an octane number on the octane scale, while tests by several unpractised observers all agreed to within less than one-tenth of a ratio; thus the H.U.C.R. or octane number of a fuel could be determined with an accuracy which the author believes has not since been improved upon.

On its calibration tests, using a non-detonating petrol, with no heat input to the carburettor, the engine developed at 1500 r.p.m. and a 5·0 : 1 compression ratio, a B.M.E.P. of 128 lb. per sq. in., while the total frictional and pumping losses, as determined by motoring, were found to be 18·2 lb. per sq. in. at this speed, corresponding to an I.M.E.P. of 146·2 lb. per sq. in. and a mechanical efficiency of 87·5 per cent at a piston speed of 2000 ft. per min. At the same time the indicated thermal efficiency at the most economical mixture strength was found to be 32·5 per cent, or 68·5 per cent of the air-cycle efficiency for a compression ratio of 5·0 : 1. It was noted, however, that when testing fuels of relatively low volatility, some loss occurred due to deposition of liquid fuel on the cylinder walls. In order to ensure against this, it was found necessary to add a considerable amount of heat to the air intake. After much experiment it was decided to standardize, for all fuels, on a heat input of 65 B.Th.U.s per minute. This reduced the volumetric efficiency and therefore the I.M.E.P. from 146·2 to 131·5 lb. per sq. in. and the indicated thermal efficiency from 32·5 per cent to 31·8 per cent.

While the calibration of the engine and its test equipment was proceeding, the Asiatic Petroleum Co. were busy collecting, preparing, and analysing samples of fuel and, at the same time, they prepared, as a lower reference fuel, about 5 tons of a light paraffin-base petrol, from which the aromatics were removed by sulphonation, together with a large supply of fairly pure toluene to serve as a blending agent.

It is not the author's purpose in this chapter to deal with the research itself, which was prosecuted very intensively during the years 1919–23 and was reported fairly fully in the technical press, but rather to discuss the mechanical behaviour of the engine itself. During the first three years of the research the engine was running under test for an average of about 25 hours per week and, during at least 95 per cent of the time, was running with wide open throttle at 1500 r.p.m. and at compression ratios ranging between 4·0 : 1 and 6·0 : 1, for very few of the fuels tested had an H.U.C.R. higher than the latter figure, and of these few several were limited by the incidence of premature ignition rather than detonation.

On the whole remarkably little trouble was experienced with the engine, and at no time during more than three years of intensive work was the research delayed for more than a day or so, due to engine trouble or overhauls.

In spite of an extremely low oil consumption, viz. about 0·3 per cent of the fuel, carbon formation on the head and piston was appreciable. This had the double effect of raising slightly the actual compression ratio and, at the same time, increasing the tendency to detonate at a lower ratio. So long as this was a gradual and progressive process it mattered little, since a daily check test on the reference fuel served to establish a correction factor which usually mounted to about 0·25 ratio after 100 to 150 hours. Beyond this point, however, the readings of H.U.C.R. would become erratic, due probably to flaking off of the carbon deposit, and it then became necessary to remove and clean the cylinder head and the crown of the piston; at the same time the valves were removed, cleaned, and lightly ground in. It became a regular practice during the more intensive period of the research to carry out this routine once every month or six weeks. Despite very intensive cooling, slight cracks developed in the cylinder head between the exhaust-valve seatings after about six months' intensive use, but in their earlier stages their presence did not appear to affect the performance in the slightest degree. A new head was, however, prepared and fitted at the next top overhaul period: this also cracked in the same places after much about the same length of time. As a next step a head was made in a special Admiralty bronze. When first fitted it was noted that the H.U.C.R. was about 0·1 ratios higher on all fuels, but depreciated rather more rapidly than with the cast-iron heads. The higher ratio was attributed, rightly or wrongly, to cooler exhaust valves, due to the better conductivity of the bronze seatings; the more rapid depreciation to the fact that though the bronze head did not crack, it buckled slightly and so distorted the valve seats. In the meantime tests with one or two exhaust valves in operation had shown that the engine performance with two exhaust valves only was the same up to a speed of well over 1500 r.p.m. as with three. A new design of head was therefore prepared with two widely separated exhaust valves and two inlet valves. This proved completely satisfactory in cast iron, and no further trouble with cracking was experienced.

A noticeable feature was the extremely low rate of wear of the cylinder bore. In the light of more recent experience this should not have been surprising for:

(1) The normal working temperature of the upper end of the bore was at all times just about the optimum for minimum corrosion or abrasive wear.

(2) In normal engines, the wear is strictly localized at the point where the top piston-ring comes to rest at T.D.C. In a variable-compression engine this is no longer a fixed point but is spread over a range of nearly an inch.

The floating-bush big-end was throughout entirely satisfactory, and on examination always appeared to be in excellent condition, despite the extremely high specific loading.

The piston also was always found to be in good condition except that two areas on the crown were eroded as a result of constant detonation. It was removed and examined at intervals of about 300–400 hours, when the ring grooves were cleaned, but was not renewed unless either the detonation erosion had become very severe, or the side-clearance of the rings had become excessive.

In view of the fact that the engine was running for most of its time either detonating or just on the verge of detonating, it is rather surprising that stuck piston-rings were almost unknown.

By about 1923, and after the engine had run a total of between 4000 and 5000 hours, the Asiatic Petroleum Co. had prepared in their laboratories a number of experimental high-octane fuels, and thereafter the tests were carried out at higher ratios of compression; the scale had moved up from the original 4 to 6·0 : 1 to the 6·0 : 1 to 7·5 : 1 region, and with it, of course, the maximum pressures had risen from the 500–700 lb. to the 700–900 lb. range.

Although in the course of calibration tests, and in that of a few of the fuel tests, the highest ranges of compression up to the limit of 8·0 : 1 had been explored, yet no long sustained running had been carried out at these ratios. The fatigue effect of these higher pressures began to manifest itself in the following ways:

(1) Cracks developed in the crown of the piston.

(2) The gudgeon-pin bosses in the piston became elongated and eventually cracked.

(3) Longitudinal fatigue cracks developed in the gudgeon-pin.

(4) The thin hollow connecting-rod started to split in the vertical plane, like a bamboo stave.

(5) The deflection of the crankshaft was such as to maltreat the ball bearing at the timing gear end of the shaft.

Fortunately each and all of these symptoms were detected in time to avert a serious breakdown.

It thus became evident that the principal working parts would need strengthening and revision. The following modifications were therefore carried out:

(1) The piston was strengthened both in the crown and at the gudgeon-pin bosses and their supporting ribs, thus adding about 20 per cent to the weight of this member.

(2) The diameter and wall thickness of the gudgeon-pin were increased.

(3) The diameter and wall thickness of the connecting-rod was increased.

(4) The dimensions of the crankwebs were increased very considerably.

(5) The crankshaft was extended at the gear end and an additional outboard ball bearing fitted.

With these modifications no further trouble was experienced, but the additional weight of the reciprocating parts, and the additional crankshaft bearing, resulted in an increase of the mechanical losses at a compression ratio of 5 : 1 from 18·2 to 21 lb. per sq. in.; this, however, was reduced subsequently to just under 20 lb. by an earlier opening of the inlet valves which reduced both the fluid-pumping losses and the air-intake noise.

During the early 1920s a great many requests were received for similar engines, and about a dozen replicas of the " E35 " were built and tested in the author's laboratory and supplied for installation in petroleum refineries, laboratories, Government establishments, universities, etc., some at least of which are still in active service.

The " E35 " engine certainly served its purpose admirably in the early days of fuel research, but later was open to the following objections:

(1) It was too large and consumed too much fuel; this became a serious matter when tests had to be carried out on costly chemical substances, or on small samples prepared from laboratory pilot plants.

(2) The maximum compression ratio of 8·0 : 1 was no longer sufficient.

(3) It was decidedly noisy; this objection applied particularly to its use in universities or for instructional purposes. Chief sources of mechanical noise were:

(*a*) Piston slap.

(*b*) Valve gear.

(*c*) The bevel drive to the camshaft, for spiral bevels were not obtainable at that date.

(*d*) The rumble of the ball bearings.

The demand for fuel-testing and, more particularly, knock-rating engines became so widespread and insistent that about 1927 the late Mr. H. L. Horning of the Waukesha Co. of America, with whom the author was closely associated, decided to develop and market a small variable-compression engine on the same general lines as the " E35 ", but since this was destined to be used for knock-rating tests only and not for general research, no attempt was made to attain a high performance, nor for this purpose alone was mechanical efficiency or

consistency of such importance, so that more attention could be devoted to good manners; this little engine later came to be known as the "C.F.R.", and was accepted universally as a standard piece of test equipment for the knock-rating of fuels. The Waukesha Motor Co., with their very large manufacturing resources, were thus able to cope

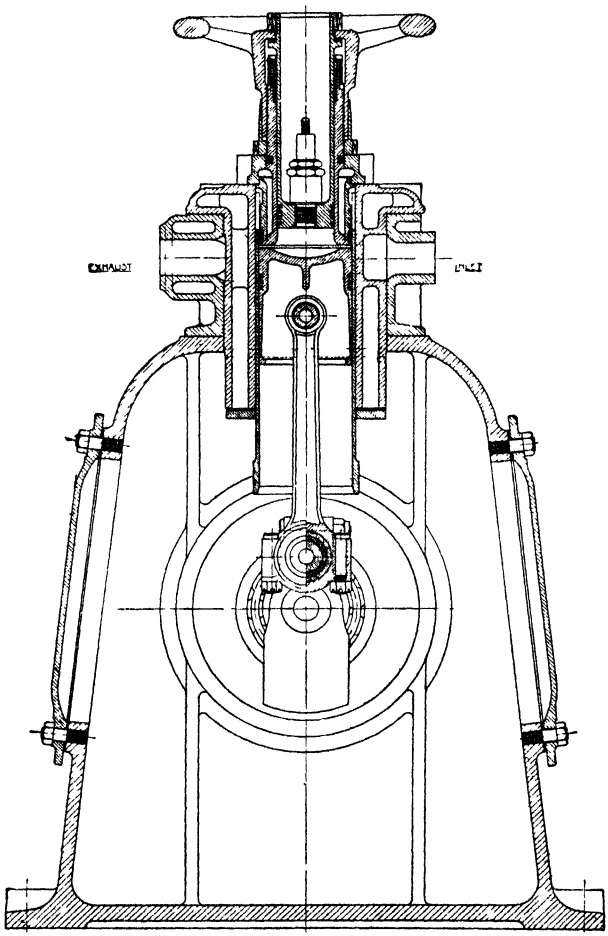

Fig. 19.6.—Cross-sectional arrangement of single sleeve-valve research unit, type E5/1

easily with the large demand growing up, in all parts of the world, for a knock-rating engine.

In an endeavour to meet the demand for a small variable-compression engine, primarily for instructional purposes in universities and technical colleges, but also for general research, a small sleeve-valve engine unit, known as the "E5", was designed and developed in the author's laboratory (figs. 19.6 and 19.7). The sleeve valve was adopted,

partly because of its mechanical reliability and partly for the sake of silence. In this case variable compression was achieved by what was in effect a second and smaller hand-operated piston or plunger carrying the single central sparking-plug and sliding in the cylinder head, this could be raised or lowered by screwing up or down, and gas tightness

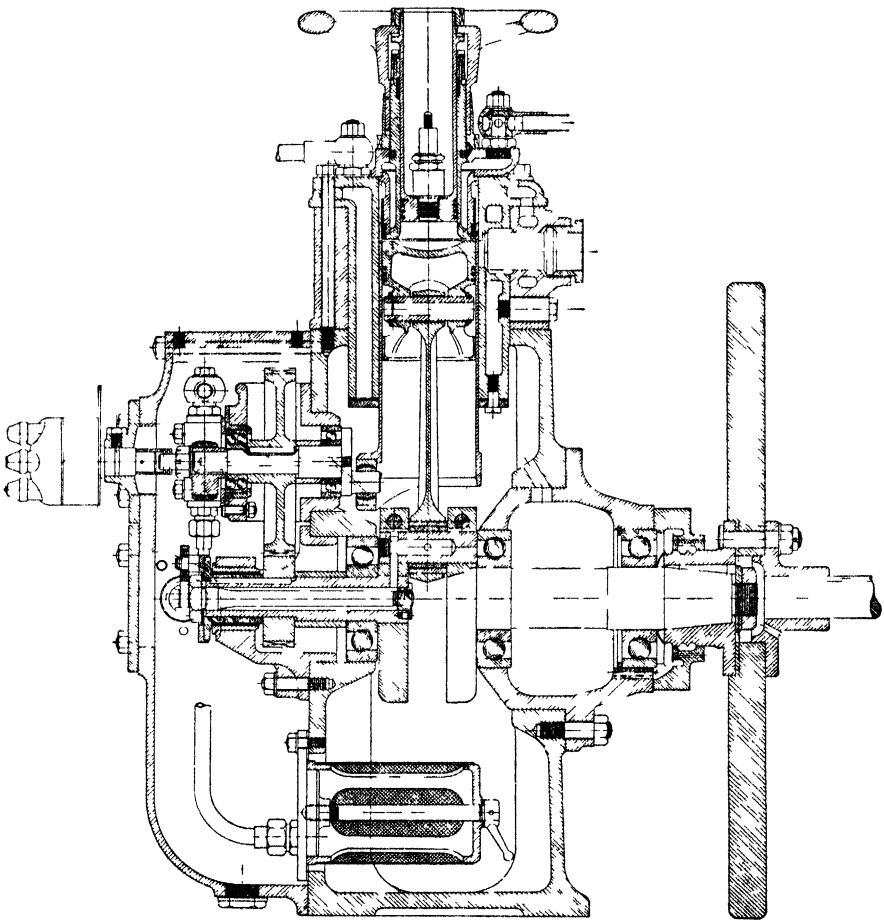

Fig 19 7.—Single sleeve-valve research unit, type E5/1

was ensured by piston-rings supplemented by a packing-gland. This arrangement gave a range of compression ratio from 5 to 12 : 1, and the engine was designed from the outset to run continuously with maximum pressures up to 1200 lb. per sq. in.

In order to ensure mechanical consistency, ball bearings were used again, and, in general, all the experience gained with the " E35 " was embodied wherever applicable, but some concessions were made on the

score of silence. This little engine of 2·75 in. bore by 3·25 in. stroke gave, on the whole, a very good performance and was quite remarkably silent; when fitted with an efficient silencer on the air intake to the carburettor, almost the only sound was a slight rumble from the ball bearings. It had been hoped that by eliminating almost completely all mechanical noise, it would be found possible to obtain a still more accurate determination of the incidence of detonation, but this hope was not fulfilled, for owing probably to the cylinder-head design, the noise of detonation was muffled and indeterminate. In the relatively noisy " E35 " engine any practised observer could locate the incidence of detonation with certainty to within one-twentieth of a ratio of compression. In the very silent " E5 " engine the same observer could not locate it to closer than about one-sixth of a ratio so that, as a knock-rating engine, it was somewhat disappointing, though this, of course, was not its primary purpose. As an instructional engine it was a success, for it had the great advantage that a lecturer or demonstrator could discuss its behaviour to a group of students without even having to raise his voice. As a general research unit its mechanical reliability and consistency were valuable assets, but it suffered from two rather serious defects:

(1) Owing to the use of the sleeve valve, there was no possible access to the cylinder except through the head and this, on so small an engine, was completely occupied by the variable-compression mechanism and the ignition plug, hence it was impossible to obtain indicator diagrams or measurements of cylinder pressures.

(2) Again, owing to the small size, it was almost impossible to water-cool the sparking-plug bosses, with the result that pre-ignition from overheated sparking-plug electrodes was rather prevalent, more especially at the higher ratios of compression.

In spite, however, of these defects, some very valuable and excellent research work has been carried out at several universities on these little " E5 " units.

Some years later yet another variable-compression engine, known as the " E6 ", was designed and developed, this time more or less a miniature version of the original " E35 ", that is to say, it is a poppet-valve engine of 3 in. bore by $4\frac{3}{8}$ in. stroke with an overhead camshaft, but with only two valves (see figs, 19.8 and 19.9). In this the range of compression is from 4·5 to 20 : 1, and the engine was designed throughout for a maximum working pressure of 1800 lb. per sq. in. Apart from size, it differed from the " E35 " in some other respects, viz. helical bevels were employed for the camshaft drive, and the cams were formed with slow approach flanks and a somewhat lower rate of acceleration. The combination of these two features rendered the valve operation

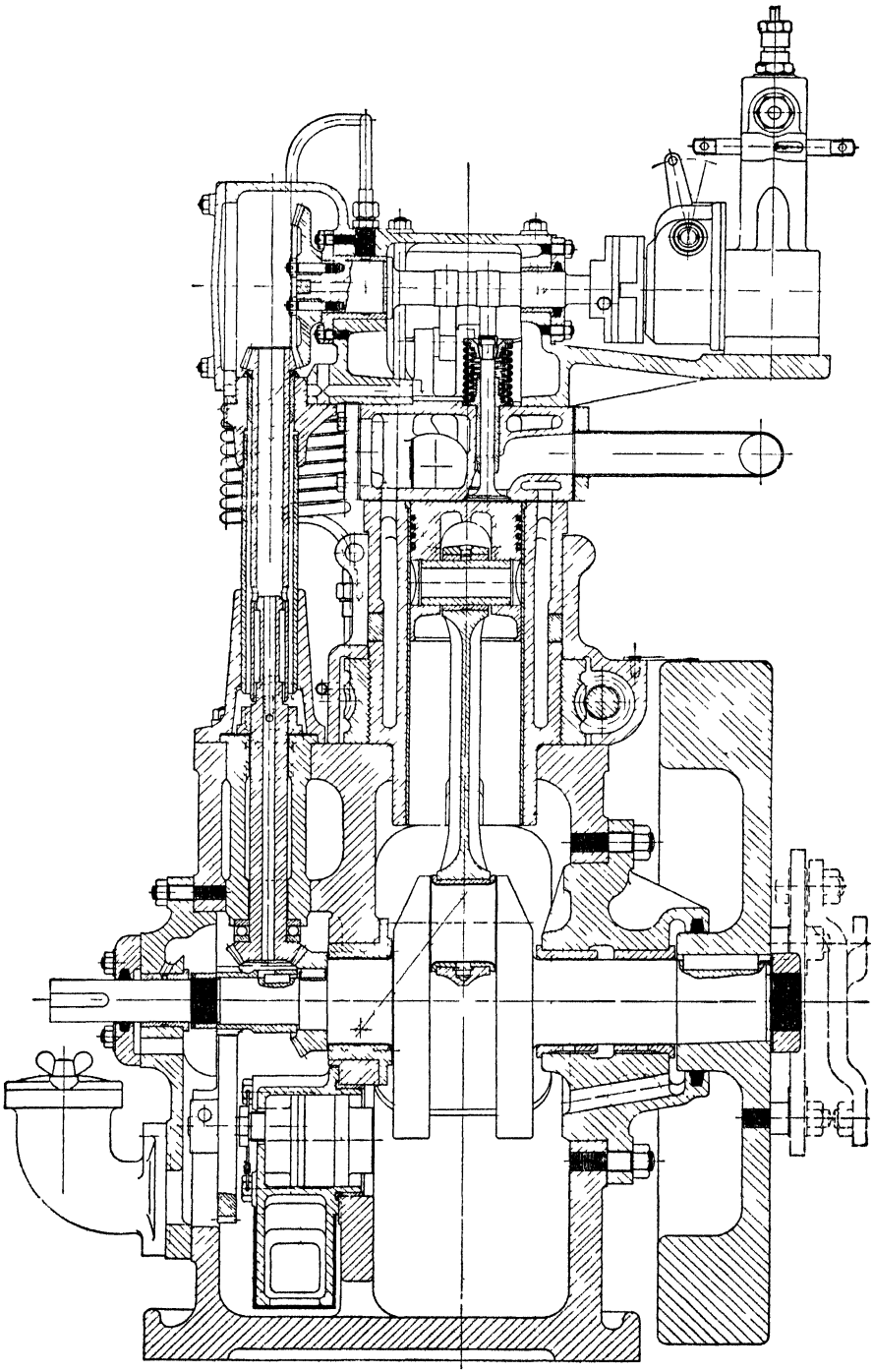

Fig 19 8 —Longitudinal arrangement of variable compression research engine E6—Diesel version. Bore 3 in. × stroke $4\frac{3}{8}$ in.

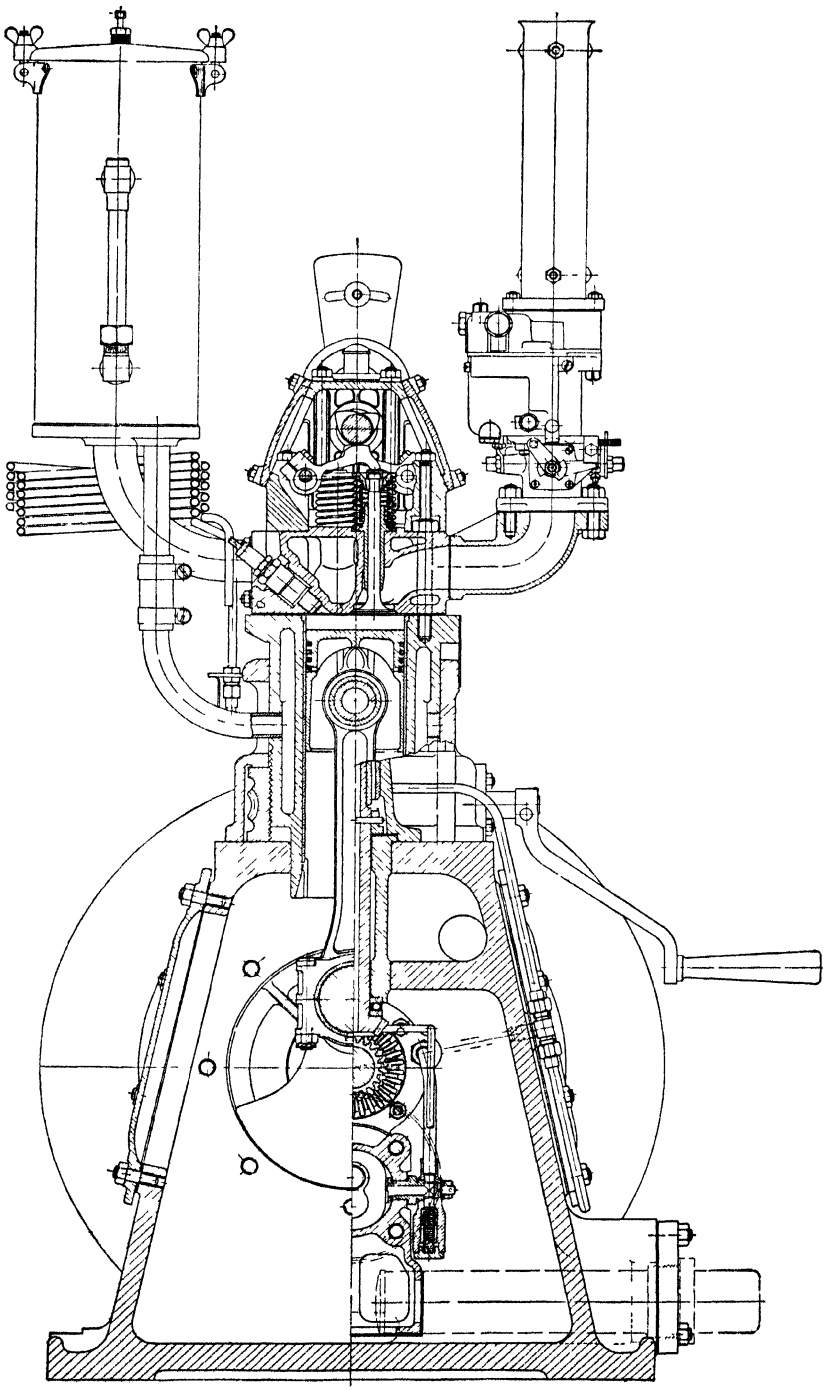

Fig. 19.9.—Cross-sectional arrangement of variable-compression research engine E6—petrol version. Bore 3 in. × stroke $4\frac{3}{8}$ in.

practically noiseless. In the interests of silence a solid forged crankshaft with plain bearings was employed and the oil temperature controlled by means of an immersion-heater in the crankcase and an independent oil-cooler, which permitted of the temperature being raised very quickly at starting and thereafter held constant by means of the oil-cooler.

In place of the stagnant water jacket round the cylinder barrel the cylinder liner temperature was maintained by the employment of evaporative cooling; thus the whole of the cooling water was maintained at boiling-point and the steam condensed in a separate condenser. This had the advantage that a constant temperature could quickly be reached and maintained, without the risk of lime deposits collecting in a stagnant jacket. Access to the combustion chamber was provided by two sparking-plug bosses at opposite sides of the cylinder, but additional blank bosses were provided in the head casting for other connections if needed. Normally only a single sparking-plug is used, leaving the other opening available for an indicator or other connection.

With close control over oil and water temperature combined with the extremely rigid crankcase and crankshaft, the bearing friction, though high, could be maintained fairly constant and the wandering error in the engine's performance was less than 1·0 per cent. As would, of course, be expected with such large bearing surfaces and massive working parts as were necessary for maximum pressures of the order 1800 lb. per sq. in., the mechanical losses were relatively very high, the total motoring friction at a compression ratio of 5·0 : 1 being 27·5 lb. per sq. in. B.M.E.P. at 1500 r.p.m., rising in a nearly straight line to 44·0 lb. at 3000 r.p.m. Compared at the same r.p.m. the motoring friction is not so very much greater than that of the original " E35 " at the same speed and compression ratio, but when compared at the same piston speed, viz. 2000 ft. per minute, the comparative motoring losses were 18·2 and 41 lb. per sq. in., a very different story.

Compared on a basis of indicated performance, that of the " E6 " is only very slightly inferior to the " E35 " at the same ratio of compression, the difference being no greater than could be accounted for by the difference in relative heat loss to the cylinder walls, but when tested on the same fuel at the H.U.C.R. of that fuel, the indicated performance of the " E6 " is considerably better than that of the " E35 ", and the brake performance only very slightly inferior. Fig. 19.10 shows the response of each of the three variable-compression engines to fuels of different octane numbers when all were tested under exactly the same conditions as to mixture strength, temperature, etc., and each at a speed very slightly above that at which maximum torque was realized.

Comparing the " E35 " and " E6 " which are generally similar

engines, the difference in H.U.C.R. is almost wholly one of scale effect. Comparing the " E5 " and " E6 " which are of very different design but more nearly the same size, the difference is that due to the use of a sleeve valve in place of poppet valves. That the difference is not even greater is due probably to the fact that the plunger for variable-compression was uncooled; for, taken by and large, it had been found that the H.U.C.R. of a sleeve-valve engine was usually one ratio higher than that of a poppet-valve overhead-valve engine of the same dimensions.

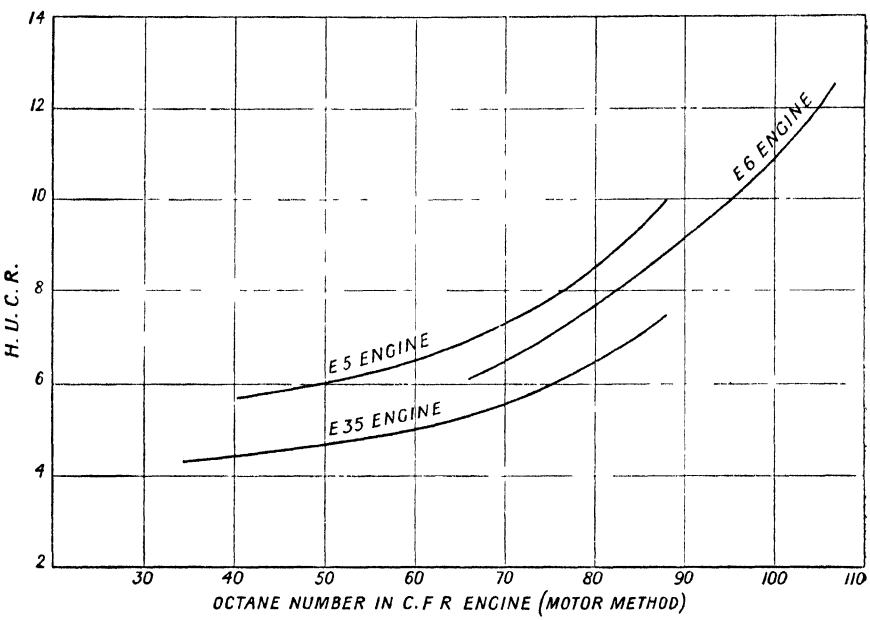

Fig. 19.10.—Curves showing relationship between H.U.C.R. and octane number

Although the H.U.C.R. of the three engines differs widely, as indeed would be expected, yet all three show exactly the same response to changes in the octane number of the fuel.

The " E6 " has proved a very useful little engine for general research of all kinds, and a considerable number have been installed in universities, etc. As a knock-rating engine it has proved very much more precise than the " E5 " and nearly equal to the " E35 ", for a practised observer can locate the H.U.C.R. with certainty to within less than one-tenth of a ratio, even in the region of 12·0 : 1 compression ratio.

In the early days of fuel research much trouble was experienced with premature ignition, due almost invariably to overheating of the sparking-plug electrodes. Because of such pre-ignition it was not found possible to explore the H.U.C.R. of pure samples of many fuels such as the aromatics, alcohols, and certain synthetic fuels.

During the late 1930s, vast improvements were made in the development of special sparking-plugs intended more especially for high-duty aero-engines. With such plugs, and provided the plug bosses were well-cooled, pre-ignition off the plug points could be almost completely eliminated.

Just prior to and during the second world war, intensive developments were taking place in the production of special very high-octane fuels, and for technical reasons it became very important to determine accurately the true H.U.C.R. of certain fuels which hitherto had pre-ignited before their detonation point had been reached. Equipped with improved sparking-plugs the " E6 " engine proved very successful up to a point and, in many cases, compression ratios as high as 16·0 : 1 could be reached without pre-ignition. Even so, however, this was not quite sufficient, for there still remained several fuels whose true H.U.C.R. could not be reached. It was thought, in such cases, that pre-ignition at these very high compression ratios was perhaps being initiated by the exhaust valve aided by the general high surface temperatures ruling inside the cylinder.

In order to overcome this difficulty, a revised version of the " E6 " was constructed as a purely fuel-testing engine. In this (figs. 19.11 and 19.12) the following modifications were made:

(1) A separate wet liner was used with a very high-velocity water circulation through a spiral passage between the liner and jacket, carried right up to the cylinder-head face.

(2) The exhaust valve was oil-cooled by a high-velocity flow of oil carried right down to the valve head.

(3) The piston was oil-cooled by a jet of oil from the connecting-rod top end playing across the head of the piston.

(4) The circulation of water within the cylinder head was intensified and directed to the hot zones by means of internal pipes.

In addition a return was made to the use of a built-up crankshaft, a floating-bush big-end, and ball and roller bearings.

With this special version and using cold water in the cylinder jackets, it was found possible to reach the H.U.C.R. of almost any fuel with the exception of carbon disulphide and, even with this, it was possible to use as much as 80 per cent in petrol. It was possible, for the first time, to determine the H.U.C.R. of benzene and toluene and of several other synthetic products which were found to detonate at compression ratios in the region of 17 or 18 : 1 as compared with 10·7 : 1 for pure iso-octane.

At a later stage it was found that with still further improvement in the development of sparking-plugs, the ordinary form of " E6 " was quite adequate, and that intensive cooling of the exhaust valve and piston was unnecessary; in other words, it was evident that, in this

small engine, pre-ignition, when it occurred, was initiated by the sparking-plug alone and that careful attention to the choice of plug and its cooling was all that was necessary.

In order to meet the demand of the universities for a C.I. engine for instructional purposes, an alternative cylinder head was designed comprising a compression air-swirl combustion chamber of the " Comet Mark II " type in which as large a proportion as possible of the air is displaced into the swirl chamber.

Since the engine had been designed for maximum pressures up to 1800 lb. per sq. in., and since the maximum ratio of compression provided for was fully adequate for compression ignition, the conversion to C.I. working involved merely a change of cylinder head and the substitution of a fuel injection pump, driven from the end of the camshaft, in place of the magneto.

Thus equipped the engine can be run as a compression-ignition unit, but not a very efficient one, for:

(1) In order to use the same flat-topped piston as in the spark-ignition version, the less efficient " Comet Mark II " form of combustion chamber was provided. The author would have preferred to use the " Comet Mark III " form, but this would have entailed a change of piston, which was considered to be very undesirable.

(2) In order to avoid collision with the valve heads with the slightly overlap timing provided, more than the minimum clearance had to be allowed between piston and valve heads at top dead centre; thus the proportion of inaccessible air is greater than would be the case had the engine been designed primarily as a C.I. unit. In consequence the air utilization and therefore the power output is rather poor.

(3) The presence of the overhead camshaft is a severe handicap in that it leaves little freedom of manœuvre for the positioning of the fuel injector.

(4) Variable compression achieved by raising or lowering the cylinder is, of course, of little use for C.I. research, since any change in the form or proportions of the combustion chamber has a profound influence on the performance of a C.I. engine.

In spite, however, of these handicaps, the C.I. version of the " E6 " gives a reasonable performance and serves quite well for instructional purposes, but it should be emphasized that the engine was designed throughout as a highly efficient research unit for spark-ignition work, and its conversion to C.I. operation is at best but a compromise. For serious research into compression-ignition problems, a totally different design of engine is required, such as that shown in figs. 19.13 and 19.14.

From a lifetime's experience in the design, construction, and hand-

ling of research units, the author can draw the following morals and conclusions:

(1) A research into almost any aspect of the internal-combustion engine invariably takes far longer, and ranges over wider fields, than anticipated at the outset, for it is seldom indeed that a single solution can be found to the problem under investigation.

(2) Before any useful results can be looked for, much time must be devoted to learning the technique and the appropriate handling of the research unit and all its attendant equipment. This often takes longer than the research itself. It is exasperating to find that the research engine is worn out before the research proper has begun.

(3) In the author's experience it never pays to employ a commercial or proprietary engine for research. The temptation to do so is, of course, enormous, both on the score of time and cost, but almost invariably it will be found that the engine is unsuitable; either it is not sufficiently robust to withstand the high pressures which the research will involve, or it is not versatile enough to permit of the changes which the research demands, or again, though reliable when used for its intended purpose, and at its designed output, it may prove very unreliable and inconsistent under the conditions imposed by research. On several occasions the author's firm has purchased a proprietary engine in order quickly to carry out some apparently simple piece of research, but, in almost every case, has regretted it for, in the event, the research has taken longer, cost more, and been less fruitful than would have been the case had a special engine been built for the purpose.

(4) When designing an engine for any piece of research, it is quite essential to decide, at the outset, what is the variable that is to be explored and to design the engine throughout for the investigation of that variable and that variable alone. There is always a great temptation to try and make such an engine as versatile as possible; this invariably entails compromise and for research there must be the very minimum of compromise. It is easy to envisage and design an engine with a host of variables, but in practice it will be found that with several variables there is no fixed point of departure, and the permanence of the latter is the first essential for research.

(5) For the research to be productive it is essential that the unit shall be reliable, not only in the sense that it will continue to run for long periods, but also in the much stricter sense that its performance will not change, within the limits of observation, over reasonably long periods, so that it can be relied upon always to yield the same performance under any given set of conditions—in other words there must be no wandering zero. This means that the

mechanical design, the workmanship and the material must all be of the highest possible class. Nothing can be too good for a research engine, for any concession to time or cost in the first instance will be paid for dearly by long delays and endless waste of time through failure to check back to the original performance.

(6) If the results of the research are to carry conviction, it is essential that they shall be good results in absolute terms, and that the performance figures obtained shall compare favourably with those of the best contemporary practice. It is seldom convincing to argue that the performance obtained under condition A is 3 per cent superior to that under condition B if both A and B are much below that of the best current practice. This may appear to be a psychological point, but it is none the less a vitally important one. One is apt to look with suspicion at any large "correction factor" for, say, unduly high mechanical friction, and rightly so, for we know from experience that mechanical friction is the most indeterminate, unstable, and fickle of all our "constants" and if large enough its inconsistency may well be sufficient to swamp the difference between A and B.

(7) If waste of time and effort are to be avoided, it is essential that all the working parts of the engine shall be readily accessible and easily dismounted, and this applies more especially when the unit is to be used for research into mechanical problems. It is essential, for instance, to provide large inspection doors in the crankcase to enable the crankpin to be seen, felt, and disconnected: the piston also must be readily accessible for examination and cleaning, and the same applies to almost all the other moving parts.

(8) In the early days it was the author's practice to provide on the crankcase, cylinder, or cylinder head a number of blank bosses and facings, for the attachment of test equipment, which might or might not be required later on. This did not prove a success for despite all the foresight that could be brought to bear the bosses or facings appeared never to be in just the right place. A better solution was found by making the walls of the crankcase so thick all over that, when the need arose, facings could be machined and studs fitted anywhere.

Research on the internal-combustion engine is at best a prolonged and costly process which permits of few short cuts. Time and money cannot be saved by any cheese-paring of the ironmongery involved but only by sound judgment based on past experience, and aided by intelligent analysis of the results obtained at each stage.

INDEX